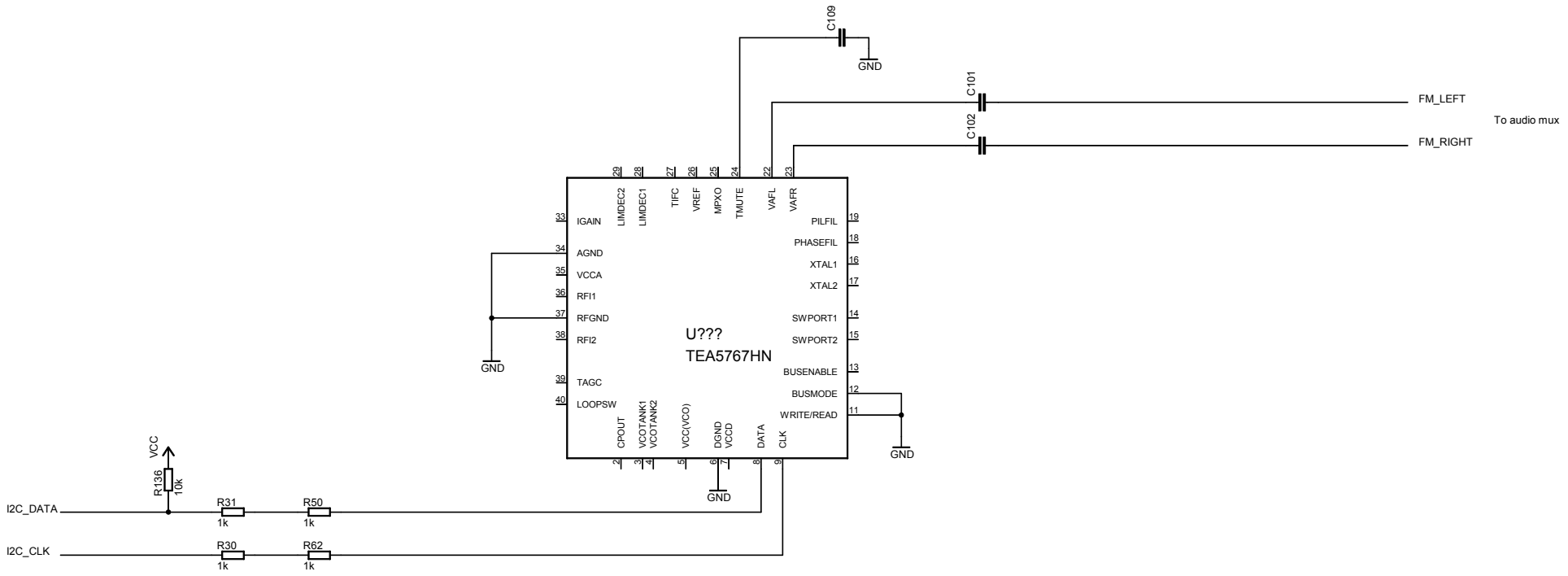

(c) 2005 Linus Nielsen Feltzing

TITLE: fmradio

Document Number:

REV: 2

Date: 2005-06-17 18:27:05

Sheet: 1/1