HD66773R

262,144-color, 132 x 176-dot Graphics Controller Driver for TFT LCD panels

REJxxxxxxx-xxxxZ
Rev.1.21
July.21.2003

Block Diagram 6

PAD Arrangement 7

PAD Coordinate 8

Pin Function 10

Block Function 15
1. System Interface 15
2. Bit Operation 15
3. Address Counter (AC) 16
4. Hardware-dither circuit 16
5. Graphics RAM (GRAM) 16
7. LCD drive power supply 16
8. Oscillation Circuit (OSC) 16
9. LCD Driver Circuit 16

GRAM Address MAP 17
Gram Address and display position on the panel (SS = “0”) 17
The relationship between GRAM data and display data (SS =”0”) 18
Gram Address and display position on the panel (SS = “1”, BGR = “1”) 20
The relationship between GRAM data and display data (SS =”1”) 21

Instructions 23
Outline 23
Instructions 25
Index 25
Status Read 25
Start Oscillation (R00h) 25
Driver Output Control (R01h) 26
LCD Driving Waveform Control (R02h) 28
Power Control 1 (R03h) Power Control 2 (R04h) 29
Power Control 3 (R0Ch) Power Control 4 (R0Dh) Power Control 5 (R0Eh) 31
Entry Mode (R05h) Compare Register (R06h) 36
Display Control 1 (R07h) 38
Frame Cycle Control (R0Bh) 40

Gate Scan Position (R0Fh) 43
Vertical Scroll Control (R11h) 44
1st-Screen Drive Position (R14h) 2nd-Screen Drive Position (R15h) 44
Horizontal RAM Address Position (R16h) Vertical RAM Address Position (R17h) 45
RAM Write Data Mask (R20h) 46
RAM Address Set (R21h) 46
Write Data to GRAM (R22h) 47
GRAM data and liquid crystal output level 49
Read Data from GRAM (R22h) 50
GRAM read sequence 51

Instruction List 53

Reset Function 54
Initial state of output pin 55

System Interface 56
18-bit interface 57
16-bit interface 58
9-bit interface 59
Data transmission synchronization in 9-bit bus interface mode 60
8-bit interface 61
Data transmission synchronization in 8-bit bus interface mode 62
Serial Peripheral interface (SPI) 63

High-Speed Burst RAM Write Function 67
Conditions on using high-speed RAM write mode 69
High-Speed RAM Write with Window Address 70

Window Address Function 72

Graphics Operation Function 73
Write-data Mask Function 74
Graphics Operation Processing 75

Scan Mode Setting 83

γ-Correction Function 84
Configuration of Grayscale Amplifier 85
γ-Correction Register 87
Ladder resistors and 8-to-1 selector 88
Variable resistor 88
Relationship between RAM data and output level 94

8-color Display Mode 95

Instruction Setting Flow 97

Power Supply Setting Flow 99

Oscillation Circuit 100

n-raster-row Inversion AC Drive 101

Interlaced Drive 102

AC Timing 104

Frame-Frequency Adjustment Function 105
Relationship between Liquid Crystal Drive Duty and Frame Frequency 105

Screen -split Drive Function 106
Conditions on Setting the 1st/2nd Screen Drive Position Register 107

Internal Configuration of Power Generation Circuit 109

Specification of External Elements Connected to HD66773R 111

Pattern Diagram for Voltage Setting 112

Absolute Maximum Ratings 113

Electric Characteristics 114
DC Characteristics 114
AC Characteristics 115
68system Bus Interface Timing Characteristics 116
80-system Bus Interface Timing Characteristics 118
Serial Peripheral Interface timing characteristics 120
Reset Timing Characteristics 120
Notes to Electrical Characteristics 121
Referential data 123
Timing characteristics diagram 128

Description

The HD66773R is a controller driver LSI compliant to 132RGB x 176-dot graphics display on TFT LCD panel in 262,144 colors. The HD66773R's bit-operation functions, 18-bit high-speed bus interface, and high-speed RAM-write function enable efficient data transfer and high-speed update of graphics RAM data.

The HD66773R operates with low voltage up to 2.2V for power supply. The HD66773R incorporates TFT gate-drive and source-drive circuits, a step-up circuit to generate LCD drive voltage, and power supply circuits such as breeder resistor and voltage follower for LCD drive, which enable a configuration of LCD module only with external elements such as capacitors and resistors. The HD66773R supports 8-color-display and standby modes, which enable precise power control by software. These features make this LSI the best solution for medium or small sized portable products such as digital cellular phones, bi-directional pagers, or small PDA, which support WWW browser, where long life battery is major concern.

Features

- Single chip controller/driver for 262,144-color, 132RGB x 176-dot graphics display on TFT LCD
- 18-/16-/9-/8-bit high-speed bus interfaces and a Serial Peripheral Interface (SPI)
- High-speed burst-RAM write function
- Window address function enabling data write in a rectangular RAM-address area
- Internal bit-operation for graphics
  - Bit-unit write-data mask function
  - Pixel-unit logical operation / conditional rewrite function
- Abundant color-display control function:
  - 262,144-color display (max.) with gamma adjustment function
  - Line-unit vertical bi-directional scrolling display function
- Architecture with low power consumption
  - Low-voltage operation: Vcc = 2.2 ~ 3.3 V
  - Internal reference voltage power supply: Vci = 2.5 ~ 3.3 V
  - Standby mode and other power-save functions:
  - Partial LCD drive: 2-screen display at arbitrary two positions
  - Internal power supply circuit
  - Internal equalizing function
- Compliant to Cst/Cadd structures
- Internal power supply circuits
  - Step-up circuit: 5 ~ 9-time scale, polarity inversion
  - Power supply for TFT common electrode: Compliant to Vcom n-raster-row AC drive
  - AC drive: Vgoff n-raster-row AC drive with Cadd structure
  - Vcom (Vgoff) amplitude adjustment: 22-scale internal electronic volume adjustment
  - Output power-supply voltage
  - Voltages for power supply for TFT common electrode: Vcom amplitude = 6V (max.), VcomH-GND = VREG1OUT (max.), VcomL-GND = 1.0V ~ -Vci+0.5V (max.)
- Internal RAM capacity: 46,464 bytes
- LCD drive circuit with 396-output source signal and 176-output gate signal
- n-raster-row inversion drive: polarity inversion by arbitrary number of lines.
- Internal oscillation and hardware reset
- Changeable source and gate shift directions
- Compliant to COG with single chip, incorporating gates arranged on both sides.

Block Diagram

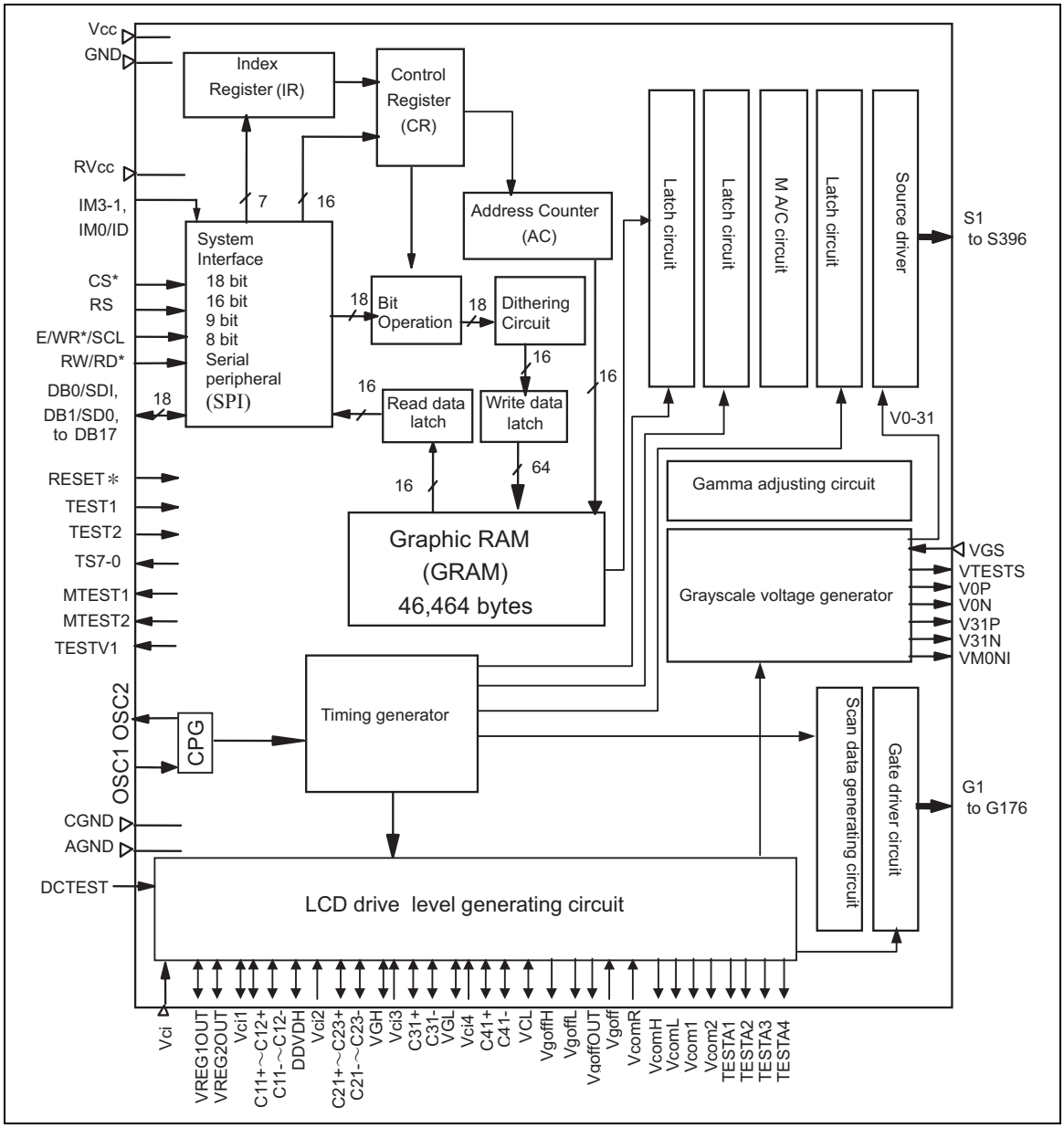

PAD Arrangement

-Chip size: 20.69mm×2.47mm
-Chip thickness: 400 μm(typ.)
-Pad Coordinate: Pad Center
-Coordinate Origin: Chip center

-Au bump size:
(1) 80 μm×80 μm
Corner dummy:
No.1,No195,No.239,No.742

(2) 54 μm×100 μm
Input side
No.2 to No.194

(3) 36 μm×70 μm
Laced liquid crystal output side:
No.196 to No.238
No.240 to No.741
No.743 to No.786

-Au bump pitch: Refer to Pad Coordinate
-Au bump height: 15 μm(typ.)
−Numbers in figure 2 refer to numbers in Pad coordinate
−Alignment Mark
(1) Assignment: 2places
Coordinate (X, Y) = (±10135,935)

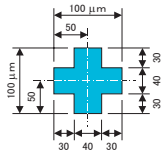

(2-a) Coordinate (X, Y) = (-10119, 1100)

(2-b) Coordinate (X, Y) = (10119,1100)

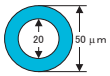

(3-a) Coordinate (X, Y) = (-10029, 1100)

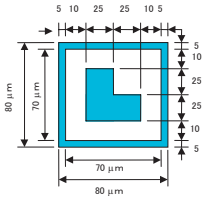

(3-b) Coordinate (X, Y) = (10029, 1100)

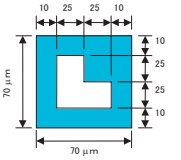

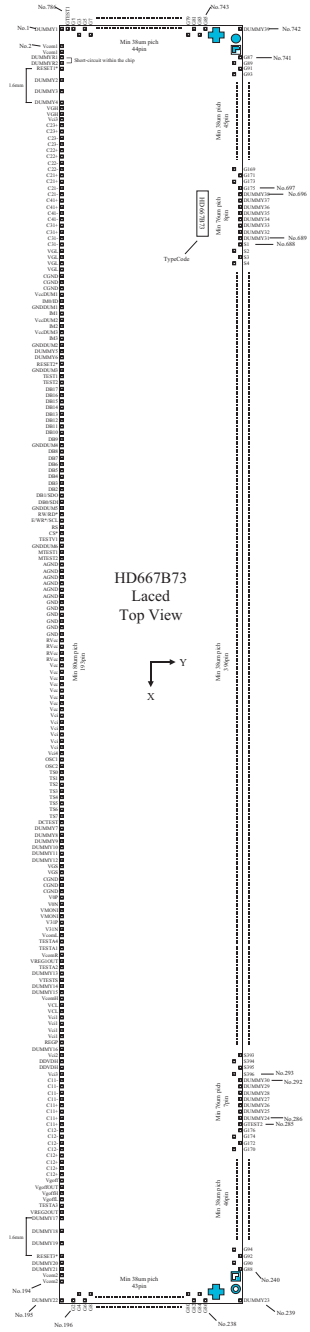

PAD Coordinate

No.	pad name	X	Y
1	DUMMY1	-10209	-1099
2	Vcom1	-10041	-1089
3	Vcom1	-9961	-1089
4	DUMMYR1	-9859	-1089
5	DUMMYR2	-9768	-1089
6	RESET1*	-9650	-1089
7	DUMMY2	-9116	-1089
8	DUMMY3	-8582	-1089
9	DUMMY4	-8048	-1089
10	VGH	-7947	-1089
11	VGH	-7867	-1089
12	Vci3	-7765	-1089
13	C23+	-7685	-1089
14	C23+	-7605	-1089
15	C23-	-7525	-1089
16	C23-	-7445	-1089
17	C22+	-7365	-1089
18	C22+	-7284	-1089
19	C22-	-7204	-1089
20	C22-	-7124	-1089
21	C21+	-7044	-1089
22	C21+	-6964	-1089
23	C21-	-6884	-1089
24	C21-	-6803	-1089
25	C41+	-6723	-1089
26	C41+	-6643	-1089
27	C41-	-6563	-1089
28	C41-	-6483	-1089
29	C31+	-6403	-1089
30	C31+	-6323	-1089
31	C31-	-6242	-1089
32	C31-	-6162	-1089
33	VGL	-6029	-1089
34	VGL	-5949	-1089
35	VGL	-5869	-1089
36	VGL	-5789	-1089
37	CGND	-5687	-1089
38	CGND	-5607	-1089
39	CGND	-5527	-1089
40	VccDUM1	-5447	-1089
41	IM0/ID	-5356	-1089
42	GNDDUM1	-5237	-1089
43	IM1	-5146	-1089
44	VccDUM2	-5028	-1089
45	IM2	-4936	-1089
46	VccDUM3	-4818	-1089
47	IM3	-4727	-1089
48	GNDDUM2	-4608	-1089
49	DUMMY5	-4528	-1089
50	DUMMY6	-4448	-1089
51	RESET2*	-4357	-1089
52	GNDDUM3	-4238	-1089
53	TEST1	-4147	-1089
54	TEST2	-4067	-1089
55	DB17	-3987	-1089
56	DB16	-3907	-1089
57	DB15	-3826	-1089
58	DB14	-3746	-1089
59	DB13	-3666	-1089
60	DB12	-3586	-1089
61	DB11	-3506	-1089
62	DB10	-3426	-1089
63	DB9	-3346	-1089
64	GNDDUM4	-3227	-1089
65	DB8	-3136	-1089
66	DB7	-3056	-1089
67	DB6	-2976	-1089
68	DB5	-2895	-1089
69	DB4	-2815	-1089
70	DB3	-2735	-1089
71	DB2	-2655	-1089
72	DB1/SDO	-2575	-1089
73	DB0/SDI	-2495	-1089
74	GNDDUM5	-2376	-1089
75	RW/RD*	-2285	-1089
76	E/WR*/SCL	-2205	-1089
77	RS	-2125	-1089
78	CS*	-2045	-1089
79	TESTV1	-1964	-1089
80	GNDDUM6	-1846	-1089
81	MTEST1	-1755	-1089
82	MTEST2	-1675	-1089
83	AGND	-1525	-1089
84	AGND	-1445	-1089
85	AGND	-1343	-1089
86	AGND	-1263	-1089
87	AGND	-1161	-1089
88	AGND	-1081	-1089
89	GND	-948	-1089
90	GND	-868	-1089
91	GND	-767	-1089
92	GND	-687	-1089
93	GND	-585	-1089
94	GND	-505	-1089
95	RVcc	-372	-1089
96	RVcc	-292	-1089
97	RVcc	-212	-1089
98	RVcc	-131	-1089
99	Vcc	-51	-1089
100	Vcc	29	-1089
101	Vcc	109	-1089
102	Vcc	189	-1089
103	Vcc	269	-1089
104	Vcc	349	-1089
105	Vcc	430	-1089
106	Vcc	510	-1089
107	Vci	590	-1089
108	Vci	670	-1089
109	Vci	750	-1089
110	Vci	830	-1089
111	Vci	911	-1089
112	Vci	991	-1089
113	Vci4	1129	-1089
114	OSC1	1257	-1089
115	OSC2	1337	-1089
116	TS0	1418	-1089
117	TS1	1498	-1089
118	TS2	1578	-1089
119	TS3	1658	-1089
120	TS4	1738	-1089
121	TS5	1818	-1089
122	TS6	1898	-1089
123	TS7	1979	-1089
124	DCTEST	2059	-1089
125	DUMMY7	2177	-1089
126	DUMMY8	2257	-1089
127	DUMMY9	2337	-1089
128	DUMMY10	2418	-1089
129	DUMMY11	2498	-1089
130	DUMMY12	2578	-1089
131	VGS	2685	-1089
132	VGS	2765	-1089
133	CGND	2872	-1089
134	CGND	2952	-1089
135	CGND	3032	-1089
136	V0P	3139	-1089
137	V0N	3219	-1089
138	VMONI	3299	-1089
139	VMONI	3380	-1089
140	V31P	3460	-1089
141	V31N	3540	-1089
142	VcomL	3657	-1089
143	TESTA4	3737	-1089
144	TESTA1	3854	-1089
145	VcomR	3934	-1089
146	VREG1OUT	4014	-1089
147	TESTA2	4094	-1089
148	DUMMY13	4201	-1089
149	VTESTS	4308	-1089
150	DUMMY14	4415	-1089
151	DUMMY15	4495	-1089
152	VcomH	4602	-1089
153	VCL	4740	-1089
154	VCL	4820	-1089
155	Vci1	4959	-1089
156	Vci1	5039	-1089
157	Vci1	5119	-1089
158	Vci1	5199	-1089
159	REGP	5343	-1089
160	DUMMY16	5450	-1089
161	Vci2	5557	-1089
162	DDVDH	5695	-1089
163	DDVDH	5776	-1089
164	Vci3	5909	-1089
165	C11-	6047	-1089
166	C11-	6127	-1089
167	C11-	6207	-1089
168	C11-	6287	-1089
169	C11+	6368	-1089
170	C11+	6448	-1089
171	C11+	6528	-1089
172	C11+	6608	-1089
173	C12-	6688	-1089
174	C12-	6768	-1089
175	C12-	6848	-1089
176	C12-	6929	-1089
177	C12+	7009	-1089
178	C12+	7089	-1089
179	C12+	7169	-1089
180	C12+	7249	-1089
181	Vgoff	7388	-1089
182	VgoffOUT	7468	-1089
183	VgoffH	7601	-1089
184	VgoffL	7681	-1089
185	TESTA3	7814	-1089
186	VREG2OUT	7947	-1089
187	DUMMY17	8048	-1089
188	DUMMY18	8582	-1089
189	DUMMY19	9116	-1089
190	RESET3*	9650	-1089
191	DUMMY20	9768	-1089
192	DUMMY21	9859	-1089
193	Vcom2	9961	-1089
194	Vcom2	10041	-1089
195	DUMMY22	10209	-1099
196	G2	10214	-801
197	G4	10104	-763
198	G6	10214	-725
199	G8	10104	-687
200	G10	10214	-649
201	G12	10104	-610
202	G14	10214	-572
203	G16	10104	-534
204	G18	10214	-496
205	G20	10104	-458
206	G22	10214	-420
207	G24	10104	-382
208	G26	10214	-343
209	G28	10104	-305
210	G30	10214	-267
211	G32	10104	-229
212	G34	10214	-191
213	G36	10104	-153
214	G38	10214	-114
215	G40	10104	-76
216	G42	10214	-38
217	G44	10104	0
218	G46	10214	38
219	G48	10104	76
220	G50	10214	114
221	G52	10104	153
222	G54	10214	191
223	G56	10104	229
224	G58	10214	267
225	G60	10104	305
226	G62	10214	343
227	G64	10104	382
228	G66	10214	420
229	G68	10104	458
230	G70	10214	496
231	G72	10104	534
232	G74	10214	572
233	G76	10104	610
234	G78	10214	649
235	G80	10104	687
236	G82	10214	725
237	G84	10104	763
238	G86	10214	801
239	DUMMY23	10209	1099
240	G88	9919	1104
241	G90	9881	994
242	G92	9843	1104
243	G94	9805	994
244	G96	9766	1104
245	G98	9728	994
246	G100	9690	1104
247	G102	9652	994
248	G104	9614	1104
249	G106	9576	994
250	G108	9538	1104
251	G110	9499	994
252	G112	9461	1104
253	G114	9423	994
254	G116	9385	1104
255	G118	9347	994
256	G120	9309	1104
257	G122	9270	994
258	G124	9232	1104
259	G126	9194	994
260	G128	9156	1104
261	G130	9118	994
262	G132	9080	1104
263	G134	9042	994
264	G136	9003	1104
265	G138	8965	994
266	G140	8927	1104
267	G142	8889	994
268	G144	8851	1104
269	G146	8813	994
270	G148	8775	1104
271	G150	8736	994
272	G152	8698	1104
273	G154	8660	994
274	G156	8622	1104
275	G158	8584	994
276	G160	8546	1104
277	G162	8507	994
278	G164	8469	1104
279	G166	8431	994
280	G168	8393	1104
281	G170	8355	994
282	G172	8317	1104
283	G174	8279	994
284	G176	8240	1104
285	GTEST2	8164	1104
286	DUMMY24	8088	1104
287	DUMMY25	8012	1104
288	DUMMY26	7935	1104
289	DUMMY27	7859	1104
290	DUMMY28	7783	1104
291	DUMMY29	7706	1104
292	DUMMY30	7630	1104
293	S396	7554	994
294	S395	7516	1104
295	S394	7477	994
296	S393	7439	1104
297	S392	7401	994
298	S391	7363	1104
299	S390	7325	994
300	S389	7287	1104
301	S388	7249	994
302	S387	7210	1104
303	S386	7172	994
304	S385	7134	1104
305	S384	7096	994
306	S383	7058	1104
307	S382	7020	994
308	S381	6981	1104
309	S380	6943	994
310	S379	6905	1104
311	S378	6867	994
312	S377	6829	1104
313	S376	6791	994
314	S375	6753	1104
315	S374	6714	994
316	S373	6676	1104
317	S372	6638	994
318	S371	6600	1104
319	S370	6562	994
320	S369	6524	1104
321	S368	6486	994
322	S367	6447	1104
323	S366	6409	994
324	S365	6371	1104
325	S364	6333	994
326	S363	6295	1104
327	S362	6257	994
328	S361	6218	1104
329	S360	6180	994
330	S359	6142	1104
331	S358	6104	994
332	S357	6066	1104
333	S356	6028	994
334	S355	5990	1104
335	S354	5951	994
336	S353	5913	1104
337	S352	5875	994
338	S351	5837	1104
339	S350	5799	994
340	S349	5761	1104
341	S348	5723	994
342	S347	5684	1104
343	S346	5646	994
344	S345	5608	1104
345	S344	5570	994
346	S343	5532	1104
347	S342	5494	994
348	S341	5455	1104
349	S340	5417	994
350	S339	5379	1104
351	S338	5341	994
352	S337	5303	1104
353	S336	5265	994
354	S335	5227	1104
355	S334	5188	994
356	S333	5150	1104
357	S332	5112	994
358	S331	5074	1104
359	S330	5036	994
360	S329	4998	1104
361	S328	4960	994
362	S327	4921	1104
363	S326	4883	994
364	S325	4845	1104
365	S324	4807	994
366	S323	4769	1104
367	S322	4731	994
368	S321	4692	1104
369	S320	4654	994
370	S319	4616	1104
371	S318	4578	994
372	S317	4540	1104
373	S316	4502	994
374	S315	4464	1104
375	S314	4425	994
376	S313	4387	1104
377	S312	4349	994
378	S311	4311	1104
379	S310	4273	994
380	S309	4235	1104
381	S308	4197	994
382	S307	4158	1104
383	S306	4120	994
384	S305	4082	1104
385	S304	4044	994
386	S303	4006	1104
387	S302	3968	994
388	S301	3929	1104
389	S300	3891	994
390	S299	3853	1104
391	S298	3815	994
392	S297	3777	1104
393	S296	3739	994
394	S295	3701	1104
395	S294	3662	994
396	S293	3624	1104
397	S292	3586	994
398	S291	3548	1104
399	S290	3510	994
400	S289	3472	1104

No.	pad name	X	Y
401	S288	3434	994
402	S287	3395	1104
403	S286	3357	994
404	S285	3319	1104
405	S284	3281	994
406	S283	3243	1104
407	S282	3205	994
408	S281	3166	1104
409	S280	3128	994
410	S279	3090	1104
411	S278	3052	994
412	S277	3014	1104
413	S276	2976	994
414	S275	2938	1104
415	S274	2899	994
416	S273	2861	1104
417	S272	2823	994
418	S271	2785	1104
419	S270	2747	994
420	S269	2709	1104
421	S268	2671	994
422	S267	2632	1104
423	S266	2594	994
424	S265	2556	1104
425	S264	2518	994
426	S263	2480	1104
427	S262	2442	994
428	S261	2403	1104
429	S260	2365	994
430	S259	2327	1104
431	S258	2289	994
432	S257	2251	1104
433	S256	2213	994
434	S255	2175	1104
435	S254	2136	994
436	S253	2098	1104
437	S252	2060	994
438	S251	2022	1104
439	S250	1984	994
440	S249	1946	1104
441	S248	1908	994
442	S247	1869	1104
443	S246	1831	994
444	S245	1793	1104
445	S244	1755	994
446	S243	1717	1104
447	S242	1679	994
448	S241	1640	1104
449	S240	1602	994
450	S239	1564	1104
451	S238	1526	994
452	S237	1488	1104
453	S236	1450	994
454	S235	1412	1104
455	S234	1373	994
456	S233	1335	1104
457	S232	1297	994
458	S231	1259	1104
459	S230	1221	994
460	S229	1183	1104
461	S228	1145	994
462	S227	1106	1104
463	S226	1068	994
464	S225	1030	1104
465	S224	992	994
466	S223	954	1104
467	S222	916	994
468	S221	877	1104
469	S220	839	994
470	S219	801	1104
471	S218	763	994
472	S217	725	1104
473	S216	687	994
474	S215	649	1104
475	S214	610	994
476	S213	572	1104
477	S212	534	994
478	S211	496	1104
479	S210	458	994
480	S209	420	1104
481	S208	382	994
482	S207	343	1104
483	S206	305	994
484	S205	267	1104
485	S204	229	994
486	S203	191	1104
487	S202	153	994
488	S201	114	1104
489	S200	76	994
490	S199	38	1104
491	S198	-38	1104
492	S197	-76	994
493	S196	-114	1104
494	S195	-153	994
495	S194	-191	1104
496	S193	-229	994
497	S192	-267	1104
498	S191	-305	994
499	S190	-343	1104
500	S189	-382	994

No.	pad name	X	Y
501	S188	-420	1104
502	S187	-458	994
503	S186	-496	1104
504	S185	-534	994
505	S184	-572	1104
506	S183	-610	994
507	S182	-649	1104
508	S181	-687	994
509	S180	-725	1104
510	S179	-763	994
511	S178	-801	1104
512	S177	-839	994
513	S176	-877	1104
514	S175	-916	994
515	S174	-954	1104
516	S173	-992	994
517	S172	-1030	1104
518	S171	-1068	994
519	S170	-1106	1104
520	S169	-1145	994
521	S168	-1183	1104
522	S167	-1221	994
523	S166	-1259	1104
524	S165	-1297	994
525	S164	-1335	1104
526	S163	-1373	994
527	S162	-1412	1104
528	S161	-1450	994
529	S160	-1488	1104
530	S159	-1526	994
531	S158	-1564	1104
532	S157	-1602	994
533	S156	-1640	1104
534	S155	-1679	994
535	S154	-1717	1104
536	S153	-1755	994
537	S152	-1793	1104
538	S151	-1831	994
539	S150	-1869	1104
540	S149	-1908	994
541	S148	-1946	1104
542	S147	-1984	994
543	S146	-2022	1104
544	S145	-2060	994
545	S144	-2098	1104
546	S143	-2136	994
547	S142	-2175	1104
548	S141	-2213	994
549	S140	-2251	1104
550	S139	-2289	994
551	S138	-2327	1104
552	S137	-2365	994
553	S136	-2403	1104
554	S135	-2442	994
555	S134	-2480	1104
556	S133	-2518	994
557	S132	-2556	1104
558	S131	-2594	994
559	S130	-2632	1104
560	S129	-2671	994
561	S128	-2709	1104
562	S127	-2747	994
563	S126	-2785	1104
564	S125	-2823	994
565	S124	-2861	1104
566	S123	-2899	994
567	S122	-2938	1104
568	S121	-2976	994
569	S120	-3014	1104
570	S119	-3052	994
571	S118	-3090	1104
572	S117	-3128	994
573	S116	-3166	1104
574	S115	-3205	994
575	S114	-3243	1104
576	S113	-3281	994
577	S112	-3319	1104
578	S111	-3357	994
579	S110	-3395	1104
580	S109	-3434	994
581	S108	-3472	1104
582	S107	-3510	994
583	S106	-3548	1104
584	S105	-3586	994
585	S104	-3624	1104
586	S103	-3662	994
587	S102	-3701	1104
588	S101	-3739	994
589	S100	-3777	1104
590	S99	-3815	994
591	S98	-3853	1104
592	S97	-3891	994
593	S96	-3929	1104
594	S95	-3968	994
595	S94	-4006	1104
596	S93	-4044	994
597	S92	-4082	1104
598	S91	-4120	994
599	S90	-4158	1104
600	S89	-4197	994

No.	pad name	X	Y
601	S88	-4235	1104
602	S87	-4273	994
603	S86	-4311	1104
604	S85	-4349	994
605	S84	-4387	1104
606	S83	-4425	994
607	S82	-4464	1104
608	S81	-4502	994
609	S80	-4540	1104
610	S79	-4578	994
611	S78	-4616	1104
612	S77	-4654	994
613	S76	-4692	1104
614	S75	-4731	994
615	S74	-4769	1104
616	S73	-4807	994
617	S72	-4845	1104
618	S71	-4883	994
619	S70	-4921	1104
620	S69	-4960	994
621	S68	-4998	1104
622	S67	-5036	994
623	S66	-5074	1104
624	S65	-5112	994
625	S64	-5150	1104
626	S63	-5188	994
627	S62	-5227	1104
628	S61	-5265	994
629	S60	-5303	1104
630	S59	-5341	994
631	S58	-5379	1104
632	S57	-5417	994
633	S56	-5455	1104
634	S55	-5494	994
635	S54	-5532	1104
636	S53	-5570	994
637	S52	-5608	1104
638	S51	-5646	994
639	S50	-5684	1104
640	S49	-5723	994
641	S48	-5761	1104
642	S47	-5799	994
643	S46	-5837	1104
644	S45	-5875	994
645	S44	-5913	1104
646	S43	-5951	994
647	S42	-5990	1104
648	S41	-6028	994
649	S40	-6066	1104
650	S39	-6104	994
651	S38	-6142	1104
652	S37	-6180	994
653	S36	-6218	1104
654	S35	-6257	994
655	S34	-6295	1104
656	S33	-6333	994
657	S32	-6371	1104
658	S31	-6409	994
659	S30	-6447	1104
660	S29	-6486	994
661	S28	-6524	1104
662	S27	-6562	994
663	S26	-6600	1104
664	S25	-6638	994
665	S24	-6676	1104
666	S23	-6714	994
667	S22	-6753	1104
668	S21	-6791	994
669	S20	-6829	1104
670	S19	-6867	994
671	S18	-6905	1104
672	S17	-6943	994
673	S16	-6981	1104
674	S15	-7020	994
675	S14	-7058	1104
676	S13	-7096	994
677	S12	-7134	1104
678	S11	-7172	994
679	S10	-7210	1104
680	S9	-7249	994
681	S8	-7287	1104
682	S7	-7325	994
683	S6	-7363	1104
684	S5	-7401	994
685	S4	-7439	1104
686	S3	-7477	994
687	S2	-7516	1104
688	S1	-7554	994
689	DUMMY31	-7630	1104
690	DUMMY32	-7706	1104
691	DUMMY33	-7783	1104
692	DUMMY34	-7859	1104
693	DUMMY35	-7935	1104
694	DUMMY36	-8012	1104
695	DUMMY37	-8088	1104
696	DUMMY38	-8164	1104
697	G175	-8240	1104
698	G173	-8279	994
699	G171	-8317	1104
700	G169	-8355	994

No.	pad name	X	Y
701	G167	-8393	1104
702	G165	-8431	994
703	G163	-8469	1104
704	G161	-8507	994
705	G159	-8546	1104
706	G157	-8584	994
707	G155	-8622	1104
708	G153	-8660	994
709	G151	-8698	1104
710	G149	-8736	994
711	G147	-8775	1104
712	G145	-8813	994
713	G143	-8851	1104
714	G141	-8889	994
715	G139	-8927	1104
716	G137	-8965	994
717	G135	-9003	1104
718	G133	-9042	994
719	G131	-9080	1104
720	G129	-9118	994
721	G127	-9156	1104
722	G125	-9194	994
723	G123	-9232	1104
724	G121	-9270	994
725	G119	-9309	1104
726	G117	-9347	994
727	G115	-9385	1104
728	G113	-9423	994
729	G111	-9461	1104
730	G109	-9499	994
731	G107	-9538	1104
732	G105	-9576	994
733	G103	-9614	1104
734	G101	-9652	994
735	G99	-9690	1104
736	G97	-9728	994
737	G95	-9766	1104
738	G93	-9805	994
739	G91	-9843	1104
740	G89	-9881	994
741	G87	-9919	1104
742	DUMMY39	-10209	1099
743	G85	-10214	801
744	G83	-10104	763
745	G81	-10214	725
746	G79	-10104	687
747	G77	-10214	649
748	G75	-10104	610
749	G73	-10214	572
750	G71	-10104	534
751	G69	-10214	496
752	G67	-10104	458
753	G65	-10214	420
754	G63	-10104	382
755	G61	-10214	343
756	G59	-10104	305
757	G57	-10214	267
758	G55	-10104	229
759	G53	-10214	191
760	G51	-10104	153
761	G49	-10214	114
762	G47	-10104	76
763	G45	-10214	38
764	G43	-10104	0
765	G41	-10214	-38
766	G39	-10104	-76
767	G37	-10214	-114
768	G35	-10104	-153
769	G33	-10214	-191
770	G31	-10104	-229
771	G29	-10214	-267
772	G27	-10104	-305
773	G25	-10214	-343
774	G23	-10104	-382
775	G21	-10214	-420
776	G19	-10104	-458
777	G17	-10214	-496
778	G15	-10104	-534
779	G13	-10214	-572
780	G11	-10104	-610
781	G9	-10214	-649
782	G7	-10104	-687
783	G5	-10214	-725
784	G3	-10104	-763
785	G1	-10214	-801
786	GTEST1	-10214	-877

Alignment mark	X	Y
Cross	-10135	935
	10135	935
Circle (Positive)	-10119	1100
Circle (Negative)	10119	1100
L (Positive)	-10029	1100
L (Negative)	10029	1100

Pin Function

<table>
<tr><th>Signals</th><th>Number of Pins</th><th>I/O</th><th>Connected to</th><th>Functions</th></tr>
<tr><td>IM3-1, IM0/ID</td><td>4</td><td>I</td><td>GND or V_{CC}</td><td>Select the mode interfacing with MPU.
<table>
<tr><th>IM3</th><th>IM2</th><th>IM1</th><th>IM0</th><th>MPU interfacing mode</th><th>DB pins</th></tr>
<tr><td>GND</td><td>GND</td><td>GND</td><td>GND</td><td>68-system 16-bit interface</td><td>DB17-10,DB8-1</td></tr>
<tr><td>GND</td><td>GND</td><td>GND</td><td>Vcc</td><td>68-system 8-bit interface</td><td>DB17-10</td></tr>
<tr><td>GND</td><td>GND</td><td>Vcc</td><td>GND</td><td>80-system 16-bit interface</td><td>DB17-10,DB8-1</td></tr>
<tr><td>GND</td><td>GND</td><td>Vcc</td><td>Vcc</td><td>80-system 8-bit interface</td><td>DB17-10</td></tr>
<tr><td>GND</td><td>Vcc</td><td>GND</td><td>ID</td><td>Serial Peripheral Interface</td><td>DB17-10,DB8-1</td></tr>
<tr><td>GND</td><td>Vcc</td><td>Vcc</td><td>*</td><td>Setting disabled</td><td></td></tr>
<tr><td>Vcc</td><td>GND</td><td>GND</td><td>GND</td><td>68-system 18-bit interface</td><td>DB17-0</td></tr>
<tr><td>Vcc</td><td>GND</td><td>GND</td><td>Vcc</td><td>68-system 9-bit interface</td><td>DB17-9</td></tr>
<tr><td>Vcc</td><td>GND</td><td>Vcc</td><td>GND</td><td>80-system 18-bit interface</td><td>DB17-0</td></tr>
<tr><td>Vcc</td><td>GND</td><td>Vcc</td><td>Vcc</td><td>80-system 9-bit interface</td><td>DB17-9</td></tr>
<tr><td>Vcc</td><td>Vcc</td><td>*</td><td>*</td><td>Setting disabled</td><td></td></tr>
</table>
In Serial Peripheral Interface mode, IMO/ID pin is used for ID setting for the device code.</td></tr>
<tr><td>CS*</td><td>1</td><td>I</td><td>MPU</td><td>Chip selection signal.
Low: Select HD66773R and accessible
High: Not select HD66773R and inaccessible
Must be fixed to GND when not used.</td></tr>
<tr><td>RS</td><td>1</td><td>I</td><td>MPU</td><td>Register selection signal.
Low: Index/status
High: Control
Must be fixed to Vcc or GND in SPI mode.</td></tr>
<tr><td>E/WR*/SCL</td><td>1</td><td>I</td><td>MPU</td><td>ENABLE signal to activate data read/write operation in 68-system bus interface.
Write strobe signal in 80-system bus interface, write data at low.
Synchronizing clock signal in SPI mode.</td></tr>
<tr><td>RW/RD*</td><td>1</td><td>I</td><td>MPU</td><td>Read/write selection signal in 68-system bus interface.
Low: Write, High: Read
Read strobe signal in 80-system bus interface, read data at low.
Must be fixed to Vcc or GND in SPI mode.</td></tr>
<tr><td>DB0/SDI</td><td>1</td><td>I/O</td><td>MPU</td><td>18-bit bi-directional data bus.
8-bit bus interface: DB17-10
9-bit bus interface: DB17-9
16-bit bus interface: DB17-10, 8-1
18-bit bus interface: DB17-0
The pins not used for data transfer must be fixed to Vcc or GND.
Serial data input pin (SDI) to input on the rising edge of SCL signal in SPI mode.</td></tr>
</table>

Signals	Number of Pins	I/O	Connected to	Functions
DB1/SDO	1	I/O	MPU	18-bit bi-directional data bus. 8-bit bus interface: DB17-10 9-bit bus interface: DB17-9 16-bit bus interface: DB17-10, 8-1 18-bit bus interface: DB17-0 The pins not used for data transfer must be fixed to Vcc or GND. Serial data output pin (SDO) to output on the falling edge of SCL signal in SPI mode.
DB2-DB17	16	I/O	MPU	18-bit bi-directional data bus. 8-bit bus interface: DB17-10 9-bit bus interface: DB17-9 16-bit bus interface: DB17-10, 8-1 18-bit bus interface: DB17-0 The pins not used for data transfer must be fixed to Vcc or GND.
OSC1, OSC2	2	I/O	Oscillation-resistor	Connect to an external resistor for R-C oscillation. When supplying clocks externally, supply with OSC1, and leave OSC2 open.
RESET1* RESET2* RESET3*	3	I	MPU or Reset generating circuit	Reset pin. Initialize the LSI at low. Power-on reset required when turning on the power supply. Supply with either one of RESET1,2,3, and leave the unused pins open.
TEST1	1	I	GND	Test pin. Must be fixed to GND level.
TEST2	1	I	GND	Test pin. Must be fixed to GND level.
Vcc, GND	2	-	Power supply	Logic Vcc: +2.2V ~ +3.3V Logic-side ground, GND: 0V
RVcc	1	-	Power supply	Vcc power supply for internal RAM. Supply same electric potential as Vcc.
AGND	1	-	Power supply	Analogue-side ground, AGND: 0 V
CGND	1	O	Opposing GND for external elements	Output GND level. Opposing GND for external elements (capacitors, diodes).
Vci	1	I	Vcc or power supply	Power supply for analogue circuits. Connect to an external power supply of 2.5V ~ 3.3V.
Vci1	1	I/O	Vcc or power supply	Output internal reference voltage with amplitude between Vci and GND. Reference voltage for step-up circuit1. Connect to an external power supply of 2.75V or lower, when internal reference voltage is not used.
DDVDH	1	I/O	Stabilizing Capacitor or open	Output Vci1 after stepped-up 2~3 times by step-up circuit 1. The step-up scale is determined with internal register setting. Connect to a stabilizing capacitor. When step-up circuit 1 is not used, leave open.
Vci2	1	I	DDVDH or power supply	Reference voltage for step-up circuit 2. Connect to DDVDH. Connect to an external power supply of 5.5V or lower, when DDVDH is not used.
VGH	1	I/O	Stabilizing Capacitor or power supply	Output voltage with amplitude between VGH and GND after stepped-up 2~4 times by step-up circuit 2. The step-up scale is determined with internal register setting. Connect to a stabilizing capacitor. When step-up circuit 2 is not used, connect to an external power supply of 16.5V or lower.

Signals	Number of Pins	I/O	Connected to	Functions
Vci3	1	I	VGH or DDVDH or power supply	Reference voltage for step-up circuit 3. Connect to VGH or DDVDH. Connect to an external power supply of 16.5V or lower, when internal power supply is not used.
VGL	1	I/O	Stabilizing Capacitor or power supply	Output voltage with amplitude between VGH and GND after multiplied by -1 by step-up circuit 3. Connect to a stabilizing capacitor. When step-up circuit 3 is not used, connect to an external power supply of -16.5V or more.
Vci4	1	I	Vcc or Vci1 or power supply	Reference voltage for a step-up circuit 4. Connect to Vci or an external power supply between 2.5 ~ 3.3 V.
VCL	1	I/O	Stabilizing Capacitor or power supply	Output voltage with amplitude between Vci4 and GND after multiplied by -1 by step-up circuit 4. Connect to a stabilizing capacitor. Power supply for generating VcomL. When using an external power supply, connect to an external power supply of –3.3V or more if VcomL is negative voltage. When VcomL is GND or more, halt step-up circuit 4 and connect it to GND.
VREG1OUT	1	I/O	Stabilizing Capacitor or power supply	Generate from internally generated reference voltage with amplitude Vci-GND and output a reference voltage for VREG1 with amplitude DDVDH-GND. The step-up scale for output voltage is determined with internal register setting. Connect to a stabilizing capacitor. This is a reference voltage for generating Vcom. Connect to an external power supply of DDVDH or lower when step-up circuit 1 is not used.
VREG2OUT	1	I/O	Stabilizing Capacitor or power supply	Generate from internally generated reference voltage with amplitude Vci-GND and output a reference voltage for VREG2 with amplitude GND-VGL. The step-up scale for output voltage is determined with internal register setting. Connect to a stabilizing capacitor. This is a reference voltage for generating VgoffOUT. Connect to an external power supply of VGL or more when step-up circuit 2 is not used.
C11+ ~ C23+, C11 - ~ C23 -	10	—	Step-up capacitor	Connect to a step-up capacitor if necessary depending on step-up scale. When internal step-up circuit is not used, leave open.
C31+, C31-	2	—	Step-up capacitor	Connect to a step-up capacitor for generating the VGL level from the Vci3 and GND levels. When internal step-up circuit is not used, leave open.
C41+, C41-	2	—	Step-up capacitor	Connect to a step-up capacitor for generating the VCL level from the Vci4 and GND levels. When internal step-up circuit is not used, leave open.
Vcom1 Vcom2	2	O	TFT common electrode	Power supply for TFT common electrode. Output the same voltage level as VcomL during display off, and output the level with amplitude VcomH-VcomL during display on. The AC cycle is changeable with liquid crystal drive AC control register (R02). Connect to a TFT common electrode.
VcomR	1	I	Variable resistor or open	VcomH reference voltage. When VcomH is externally adjusted, halt the internal adjuster of VcomH with register setting and place a variable resistor between VREG1OUT and GND. When VcomH is not externally adjusted, leave it open and adjust VcomH with internal register setting.

Signals	Number of Pins	I/O	Connected to	Functions
VcomH	1	O	Stabilizing Capacitor	Vcom high level generated during Vcom AC drive. Connect to a stabilizing capacitor.
VcomL	1	O	Stabilizing Capacitor or open	The Vcom level without Vcom AC drive, and Vcom low level with Vcom AC drive. The voltage can be adjusted with internal register setting. Connect to a stabilizing capacitor. VcomL output is halted when VCOMG bit is LOW, and in this case, stabilizing capacitor is not necessary.
VgoffOUT	1	O	Vgoff or Open	Output power supply for gate drive. Internal register setting enables AC drive in synchronization with Vcom. Make an appropriate setting for the structure of hold capacitor of TFT display. Output the amplitude VcomH-VcomL in reference to VgoffL with AC drive.
Vgoff	1	I	VgoffOUT or power supply	TFT gate off level. Negative voltage. Connect to VgoffOUT or otherwise, connect to external voltage power supply of VGL or more.
VgoffH	1	O	Stabilizing Capacitor or open	VgoffOUT high level with Vgoff AC drive. Connect to a stabilizing capacitor. The Vgoff output is halted when CAD bit is LOW. In this case, no stabilizing capacitor is necessary.
VgoffL	1	O	Stabilizing Capacitor	VgoffOUT without Vgoff AC drive, and VgoffOUT low level with Vgoff AC drive. The voltage can be adjusted with internal register setting. Connect to a stabilizing capacitor.
V0P V31P	2	I/O	Stabilizing Capacitor	Output from positive-polarity internal operational amplifier when the internal operational amplifier is turned on. Connect to a stabilizing capacitor.
V0N V31N	2	I/O	Stabilizing Capacitor	Output from negative-polarity internal operational amplifier when the internal operational amplifier is turned on. Connect to a stabilizing capacitor.
VGS	1	I	GND or external resistor	Reference voltage for grayscale voltage generating circuit. Place a variable resistor externally when adjusting a level for each panel.
S1–S396	396	O	LCD	Source output signal. The shift direction of segment signal is changeable with SS bit: SS = 0, RAM address 0000 is output from S1. SS = 1, it is output from S396. S1, S4, S7, ... display red (R), S2, S5, S8, ... display green (G), and S3, S6, S9, ... display blue (B) (SS = 0).
G1-176	176	O	LCD	Gate output signal. Output VGH level to select a gate line, and output Vgoff level not to select a gate line.
GTEST1-2	2	O	LCD or Open	Dummy gate output signal. Output the VGH level to select a gate line, and output the Vgoff level not to select a gate line when CAD bit is High. Output the Vgoff level not to select a gate line when CAD bit is Low. Leave open when not used.
TESTA1	1	I/O	Stabilizing Capacitor or Open	A test pin for the VcomH output. Leave it open or connect to a stabilizing capacitor if necessary depending on the quality of display.
TESTA2	1	I/O	Stabilizing Capacitor or Open	A test pin for the VcomL output. Leave it open or connect to a stabilizing capacitor if necessary depending on the quality of display.
TESTA3	1	I/O	Stabilizing Capacitor or Open	A test pin for the Vgoff output. Leave it open or connect to a stabilizing capacitor if necessary depending on the quality of display.

Signals	Number of Pins	I/O	Connected to	Functions
TESTA4	1	I/O	Stabilizing Capacitor or Open	A test pin for the VcomL output. Leave it open or connect to a stabilizing capacitor if necessary depending on the quality of display.
DCTEST	1	I	GND	A test pin. Must be connected to GND.
MTEST1 MTEST2	2	O	Open	Test pins. Leave open.
VTESTS	1	I/O	Open	A test pin. Leave open.
TS0-TS7	8	O	Open	A test pin. Leave open.
VMONI	1	O	Open	A test pin. Leave open.
TESTV1	1	I	GND	A test pin. Must be connected to GND.
REGP	1	I/O	Open	A test pin for VREG1OUT. Leave open.
DUMMY1, 22, 23, 39	4	O	Open	Test outputs. Leave open.
DUMMY2-21, DUMMY24-38	35	—	Dummy	Dummy pads. Connected to nowhere.

Block Function

1. System Interface

The HD66773R incorporates three kinds of high-speed system interfaces: 68-system and 80-system interfaces with 18-/16-/9-/8-bit bus, and Serial Peripheral Interface (SPI). The interfacing mode is selected with IM3-0 pins.

The HD66773R has three 16-bit registers: index register (IR), write data register (WDR), and read data register (RDR). The IR stores the information of each control register and the index information of GRAM. The WDR temporarily stores data before written to the control register or GRAM. The RDR temporarily stores the data, which is read from GRAM. Data written into GRAM from the MPU is first written into the WDR and then is automatically written into GRAM by internal operation. Since data are read through the RDR from GRAM, the data read out first are invalid and the ensuing data are read out normally.

The execution time for the instructions other than oscillation start is 0-clock cycle, which enables writing instructions consecutively.

Register Selection (8/9/16/18 Parallel Interface)

80-system		68-system	RS	Operation
WR*	RD*	R/W		
0	1	0	0	Write index into IR
1	0	1	0	Read internal status
0	1	0	1	Write to control register and GRAM through WDR
1	0	1	1	Read from GRAM through RDR

Register Selection (Serial Peripheral Interface)

Start byte		
R/W Bits	RS Bits	Operations
0	0	Write index into IR
1	0	Read internal status
0	1	Write to control register and GRAM through WDR
1	1	Read from GRAM through RDR

2. Bit Operation

The HD66773R supports write data mask function to write bit data selectively to GRAM and logical arithmetical operation to perform logical arithmetical operation and conditional rewrite on GRAM display data and then rewrite the data to GRAM. These functions significantly reduce the load on the graphics-processing software in the microcomputer, and enable high-speed overwrite of GRAM display data. For details, see “Graphics Operation Function”.

3. Address Counter (AC)

The address counter (AC) assigns addresses to GRAM. When an address set instruction is written into the IR, the address information is sent from the IR to the AC.

After writing data into GRAM, the AC is automatically updated plus or minus 1. The AC is not updated when the data are read from GRAM. Window address function enables data write only in the rectangular area of GRAM specified by window addresses.

4. Hardware-dither circuit

The hardware-dither circuit converts 18-bit one-pixel data to 16-bit data with hardware-dither conversion.

5. Graphics RAM (GRAM)

GRAM is graphics RAM that stores bit-pattern data of 132 x 176 bytes with 16 bits per pixel.

6. Gray scale power supply voltage generating circuit

The grayscale voltage generation circuit generates liquid crystal drive voltage according to the grayscale level set with the γ-adjustment register, enabling 262,144-color display with 18 bits per pixel. For details, see the "γ-adjustment Register" section.

7. LCD drive power supply

The LCD drive power supply generates LCD drive voltage levels, VOP, VON, V31P, V31N, VGH, VGL, VgoffOUT, and Vcom.

8. Oscillation Circuit (OSC)

The HD66773R can provide R-C oscillation simply by placing an external oscillation-resistor between OSC1 and OSC2 pins. An appropriate oscillation frequency for operating voltage, display size, and frame frequency can be obtained by adjusting the external-resistor value. Clock pulses can be supplied externally. Since R-C oscillation is halted during standby mode, current consumption will be reduced. For details, see "Oscillation Circuit".

9. LCD Driver Circuit

The LCD driver circuit of HD66773R consists of a 396-output source driver (S1 ~ S396) and a 176-output gate driver (G1 ~ G176). Display pattern data are latched when 396-bit data arrive. The latched data controls source driver and generates drive waveforms. The gate driver, which operates display scan, selects either VGH or Vgoff level to output. The shift direction of outputting 396-bit data from source driver outputs is changeable with the SS bit. The shift direction of gate driver scan is changeable with the GS bit. The scan mode of gate driver is changeable with SM bit. Select an appropriate shift direction and scan mode for an assembly.

GRAM Address MAP

Gram Address and display position on the panel (SS = "0")

S/G pin		S1	S2	S3	S4	S5	S6	S7	S8	S9	S10	S11	S12	.....	S385	S386	S387	S388	S389	S390	S391	S392	S393	S394	S395	S396
GS=0	GS=1	DB17 .... DB0			DB17 .... DB0			DB17 .... DB0			DB17 .... DB0				DB17 .... DB0			DB17 .... DB0			DB17 .... DB0			DB17 .... DB0		
G1	G176	"0000"H			"0001"H			"0002"H			"0003"H			.....	"0080"H			"0081"H			"0082"H			"0083"H		
G2	G175	"0100"H			"0101"H			"0102"H			"0103"H			.....	"0180"H			"0181"H			"0182"H			"0183"H		
G3	G174	"0200"H			"0201"H			"0202"H			"0203"H			.....	"0280"H			"0281"H			"0282"H			"0283"H		
G4	G173	"0300"H			"0301"H			"0302"H			"0303"H			.....	"0380"H			"0381"H			"0382"H			"0383"H		
G5	G172	"0400"H			"0401"H			"0402"H			"0403"H			.....	"0480"H			"0481"H			"0482"H			"0483"H		
G6	G171	"0500"H			"0501 H			"0502"H			"0503"H			.....	"0580"H			"0581 H			"0582"H			"0583"H		
G7	G170	"0600"H			"0601"H			"0602"H			"0603"H			.....	"0680"H			"0681"H			"0682"H			"0683"H		
G8	G169	"0700"H			"0701"H			"0702"H			"0703"H			.....	"0780"H			"0781"H			"0782"H			"0783"H		
G9	G168	"0800"H			"0801"H			"0802"H			"0803"H			.....	"0880"H			"0881"H			"0882"H			"0883"H		
G10	G167	"0900"H			"0901"H			"0902"H			"0903"H			.....	"0980"H			"0981"H			"0982"H			"0983"H		
G11	G166	"0A00"H			"0A01"H			"0A02"H			"0A03"H			.....	"0A80"H			"0A81"H			"0A82"H			"0A83"H		
G12	G165	"0B00"H			"0B01"H			"0B02"H			"0B03"H			.....	"0B80"H			"0B81"H			"0B82"H			"0B83"H		
G13	G164	"0C00"H			"0C01"H			"0C02"H			"0C03"H			.....	"0C80"H			"0C81"H			"0C82"H			"0C83"H		
G14	G163	"0D00"H			"0D01"H			"0D02"H			"0D03"H			.....	"0D80"H			"0D81"H			"0D82"H			"0D83"H		
G15	G162	"0E00"H			"0E01"H			"0E02"H			"0E03"H			.....	"0E80"H			"0E81"H			"0E82"H			"0E83"H		
G16	G161	"0F00"H			"0F01"H			"0F02"H			"0F03"H			.....	"0F80"H			"0F81"H			"0F82"H			"0F83"H		
G17	G160	"1000"H			"1001"H			"1002"H			"1003"H			.....	"1080"H			"1081"H			"1082"H			"1083"H		
G18	G159	"1100"H			"1101"H			"1102"H			"1103"H			.....	"1180"H			"1181"H			"1182"H			"1183"H		
G19	G158	"1200"H			"1201"H			"1202"H			"1203"H			.....	"1280"H			"1281"H			"1282"H			"1283"H		
G20	G157	"1300"H			"1301"H			"1302"H			"1303"H			.....	"1380"H			"1381"H			"1382"H			"1383"H		
⋮	⋮	⋮			⋮			⋮			⋮				⋮			⋮			⋮			⋮		
G169	G8	"A800"H			"A801"H			"A802"H			"A803"H			.....	"A880"H			"A881"H			"A882"H			"A883"H		
G170	G7	"A900"H			"A901"H			"A902"H			"A903"H			.....	"A980"H			"A981"H			"A982"H			"A983"H		
G171	G6	"AA00"H			"AA01"H			"AA02"H			"AA03"H			.....	"AA80"H			"AA81"H			"AA82"H			"AA83"H		
G172	G5	"AB00"H			"AB01"H			"AB02"H			"AB03"H			.....	"AB80"H			"AB81"H			"AB82"H			"AB83"H		
G173	G4	"AC00"H			"AC01"H			"AC02"H			"AC03"H			.....	"AC80"H			"AC81"H			"AC82"H			"AC83"H		
G174	G3	"AD00"H			"AD01"H			"AD02"H			"AD03"H			.....	"AD80"H			"AD81"H			"AD82"H			"AD83"H		
G175	G2	"AE00"H			"AE01"H			"AE02"H			"AE03"H			.....	"AE80"H			"AE81"H			"AE82"H			"AE83"H		
G176	G1	"AF00"H			"AF01"H			"AF02"H			"AF03"H			.....	"AF80"H			"AF81"H			"AF82"H			"AF83"H		

The relationship between GRAM data and display data (SS =”0”)

The following figures illustrate the relationship between GRAM data and display data in each interface mode.

18-bit interface & hard dithering mode

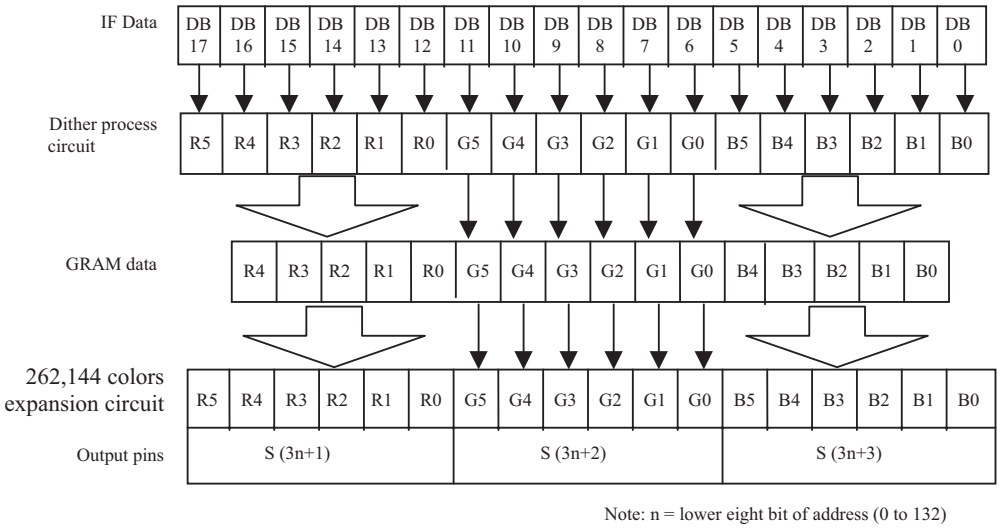

Note: n = lower eight bit of address (0 to 132)

16-bit interface

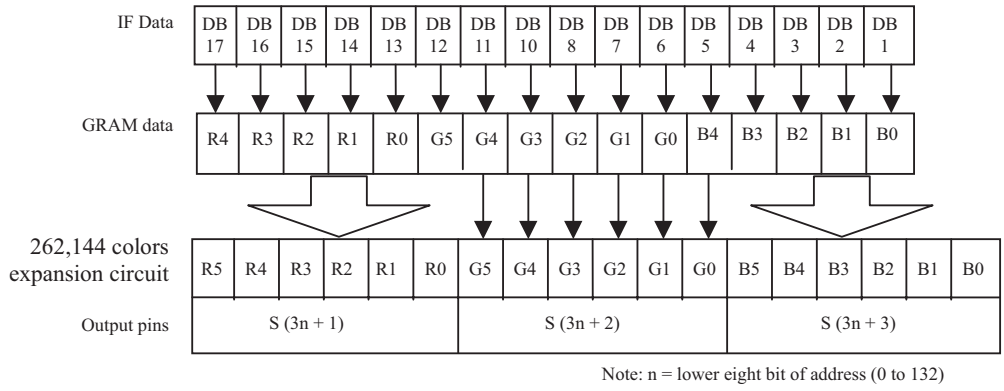

Note: n = lower eight bit of address (0 to 132)

9-bit interface &hard dither mode

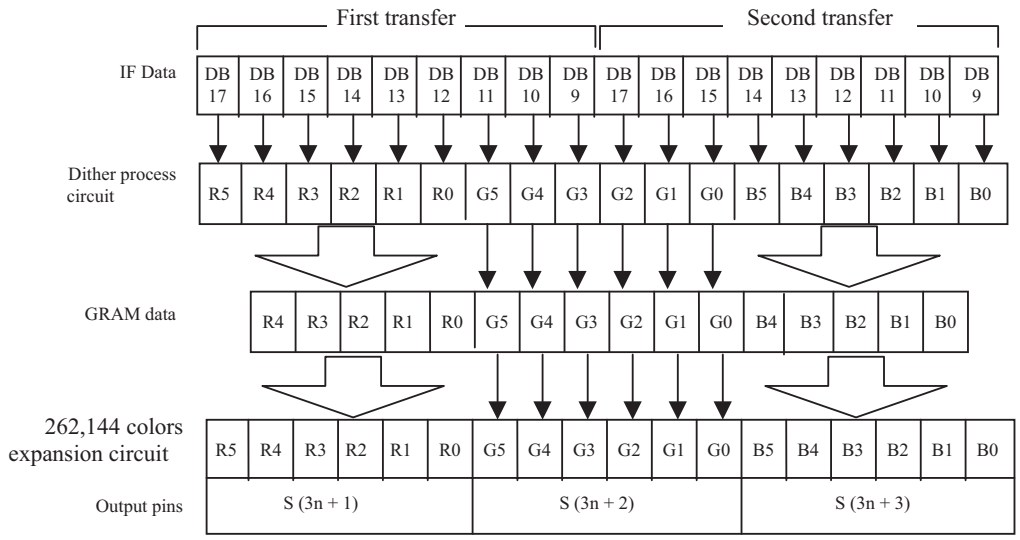

Note: n = lower eight bit of address (0 to 132)

8-bit interface / SPI

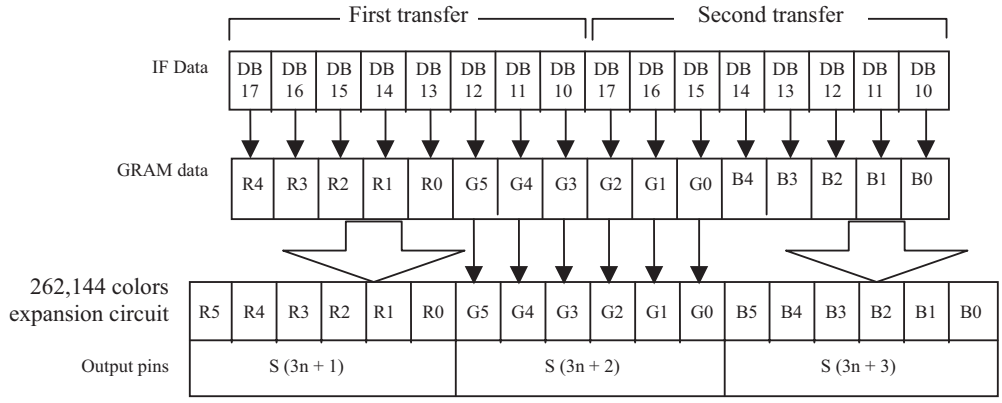

Note: n = lower eight bite of address (0 to 132)

Gram Address and display position on the panel (SS = “1”, BGR = “1”)

S/G pin		S1	S2	S3	S4	S5	S6	S7	S8	S9	S10	S11	S12	.....	S385	S386	S387	S388	S389	S390	S391	S392	S393	S394	S395	S396
GS=0	GS=1	DB0 ... DB17			DB0 ... DB17			DB0 ... DB17			DB0 ... DB17				DB0 ... DB17			DB0 ... DB17			DB0 ... DB17			DB0 ... DB17		
G1	G176	"0083"H			"0082"H			"0081"H			"0080"H			.....	"0003"H			"0002"H			"0001"H			"0000"H		
G2	G175	"0183"H			"0182"H			"0181"H			"0180"H			.....	"0103"H			"0102"H			"0101"H			"0100"H		
G3	G174	"0283"H			"0282"H			"0281"H			"0280"H			.....	"0203"H			"0202"H			"0201"H			"0200"H		
G4	G173	"0383"H			"0382"H			"0381"H			"0380"H			.....	"0303"H			"0302"H			"0301"H			"0300"H		
G5	G172	"0483"H			"0482"H			"0481"H			"0480"H			.....	"0403"H			"0402"H			"0401"H			"0400"H		
G6	G171	"0583"H			"0582"H			"0581 H			"0580"H			.....	"0503"H			"0502"H			"0501 H			"0500"H		
G7	G170	"0683"H			"0682"H			"0681"H			"0680"H			.....	"0603"H			"0602"H			"0601"H			"0600"H		
G8	G169	"0783"H			"0782"H			"0781"H			"0780"H			.....	"0703"H			"0702"H			"0701"H			"0700"H		
G9	G168	"0883"H			"0882"H			"0881"H			"0880"H			.....	"0803"H			"0802"H			"0801"H			"0800"H		
G10	G167	"0983"H			"0982"H			"0981"H			"0980"H			.....	"0903"H			"0902"H			"0901"H			"0900"H		
G11	G166	"0A83"H			"0A82"H			"0A81"H			"0A80"H			.....	"0A03"H			"0A02"H			"0A01"H			"0A00"H		
G12	G165	"0B83"H			"0B82"H			"0B81"H			"0B80"H			.....	"0B03"H			"0B02"H			"0B01"H			"0B00"H		
G13	G164	"0C83"H			"0C82"H			"0C81"H			"0C80"H			.....	"0C03"H			"0C02"H			"0C01"H			"0C00"H		
G14	G163	"0D83"H			"0D82"H			"0D81"H			"0D80"H			.....	"0D03"H			"0D02"H			"0D01"H			"0D00"H		
G15	G162	"0E83"H			"0E82"H			"0E81"H			"0E80"H			.....	"0E03"H			"0E02"H			"0E01"H			"0E00"H		
G16	G161	"0F83"H			"0F82"H			"0F81"H			"0F80"H			.....	"0F03"H			"0F02"H			"0F01"H			"0F00"H		
G17	G160	"1083"H			"1082"H			"1081"H			"1080"H			.....	"1003"H			"1002"H			"1001"H			"1000"H		
G18	G159	"1183"H			"1182"H			"1181"H			"1180"H			.....	"1103"H			"1102"H			"1101"H			"1100"H		
G19	G158	"1283"H			"1282"H			"1281"H			"1280"H			.....	"1203"H			"1202"H			"1201"H			"1200"H		
G20	G157	"1383"H			"1382"H			"1381"H			"1380"H			.....	"1303"H			"1302"H			"1301"H			"1300"H		
⋮		⋮			⋮			⋮			⋮				⋮			⋮			⋮			⋮		
G169	G8	"A883"H			"A882"H			"A881"H			"A880"H			.....	"A803"H			"A802"H			"A801"H			"A800"H		
G170	G7	"A983"H			"A982"H			"A981"H			"A980"H			.....	"A903"H			"A902"H			"A901"H			"A900"H		
G171	G6	"AA83"H			"AA82"H			"AA81"H			"AA80"H			.....	"AA03"H			"AA02"H			"AA01"H			"AA00"H		
G172	G5	"AB83"H			"AB82"H			"AB81"H			"AB80"H			.....	"AB03"H			"AB02"H			"AB01"H			"AB00"H		
G173	G4	"AC83"H			"AC82"H			"AC81"H			"AC80"H			.....	"AC03"H			"AC02"H			"AC01"H			"AC00"H		
G174	G3	"AD83"H			"AD82"H			"AD81"H			"AD80"H			.....	"AD03"H			"AD02"H			"AD01"H			"AD00"H		
G175	G2	"AE83"H			"AE82"H			"AE81"H			"AE80"H			.....	"AE03"H			"AE02"H			"AE01"H			"AE00"H		
G176	G1	"AF83"H			"AF82"H			"AF81"H			"AF80"H			.....	"AF03"H			"AF02"H			"AF01"H			"AF00"H		

The relationship between GRAM data and display data (SS =”1”)

The following figures illustrate the relationship between GRAM data and display data in each interface mode.

18-bit interface & hard dither mode

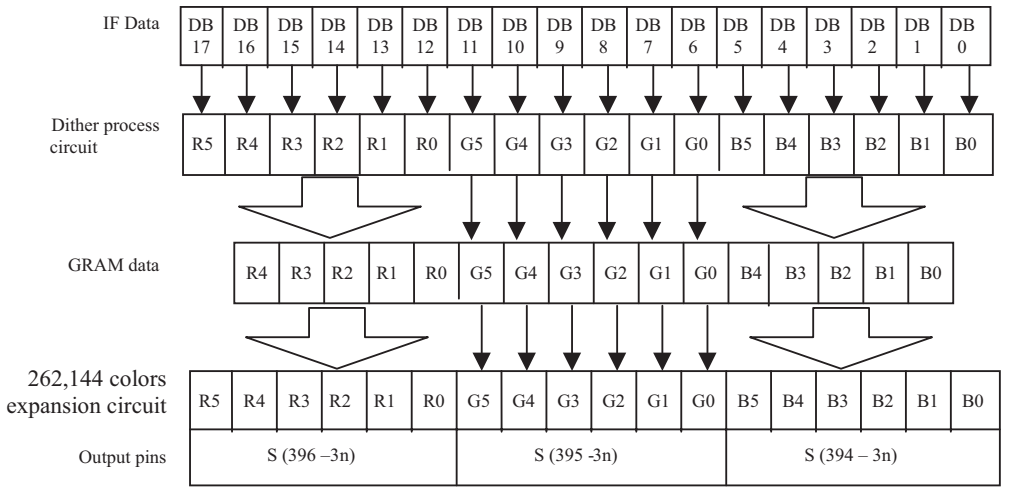

Note: n = lower eight bite of address (0 to 132)

16-bit interface

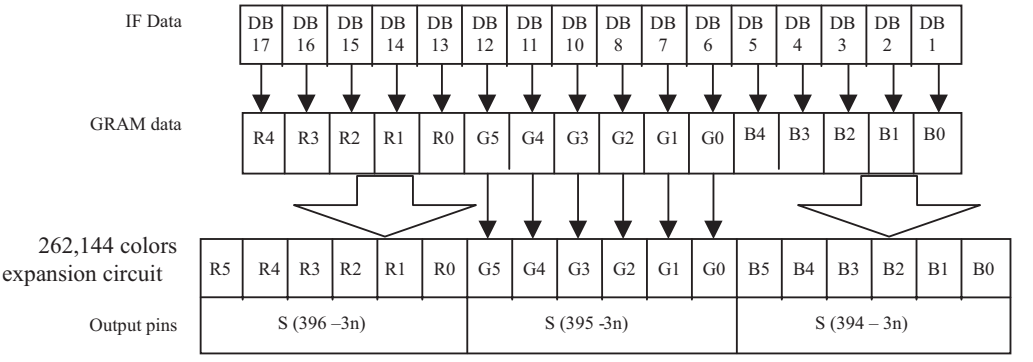

Note: n = lower eight bite of address (0 to 132)

9-bit interface & hardware dither mode

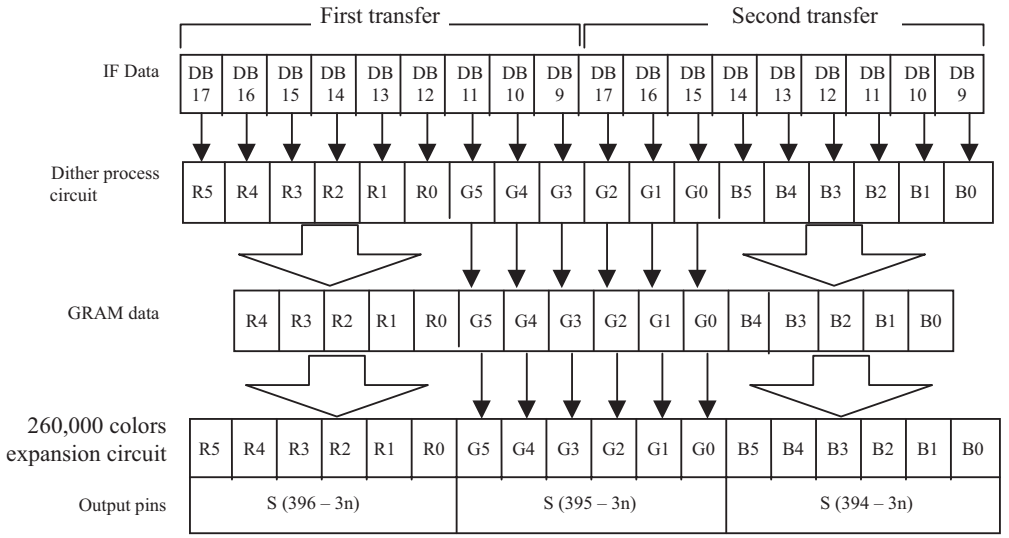

Note: n = lower eight bite of address (0 to 131)

8-bit interface / SPI

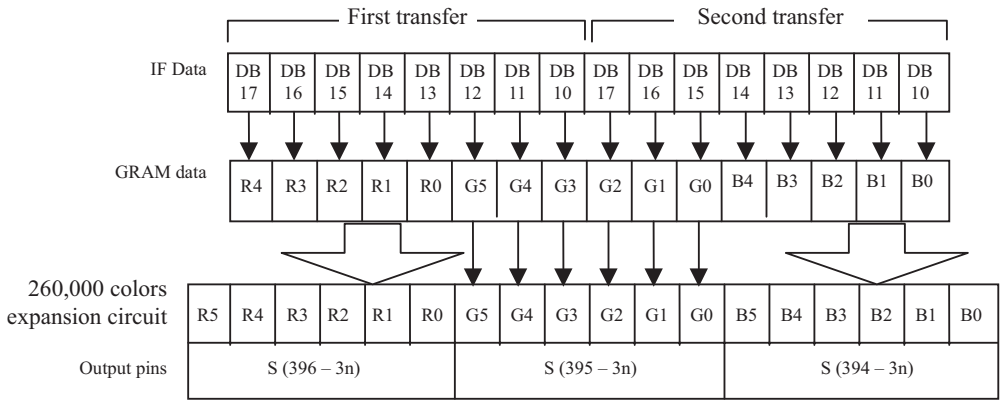

Note: n = lower eight bite of address (0 to 131)

Instructions

Outline

The HD66773R adapts 18-bit bus architecture that enables high-speed interfacing with a high-performance microcomputer. Data sent from external (18/16/9/8 bits) are stored temporarily in the instruction register (IR) and the data register (DR) to store control information before internal operation starts. Since internal operation is decided according to the signal sent from the microcomputer, register selection signal (RS), read/write signal (R/W), and internal 16-bit data bus signal (DB15 to DB0) are called instruction. GRAM is accessed through internal 18-bit data bus. There are eight categories of instructions:

1. Specify index
2. Read status
3. Control display
4. Control power management
5. Process graphics data
6. Set internal GRAM addresses
7. Transfer data to and from internal GRAM
8. Set grayscale level for internal grayscale γ-adjustment

Normally, the 7th instruction to write display data is executed the most frequently. The address of internal GRAM is updated automatically after data are written to internal GRAM. With window address function, this reduces the amount of data transmission to minimum and thereby lightens the load on the program in the microcomputer. Since instructions are executed in 0 cycle, it is possible to write instructions consecutively.

As the following figure shows, the assignment to the 16 instruction bits (IB15-0) varies according to the interface in use. An instruction must adopt the data format for each interface.

18-bit interface

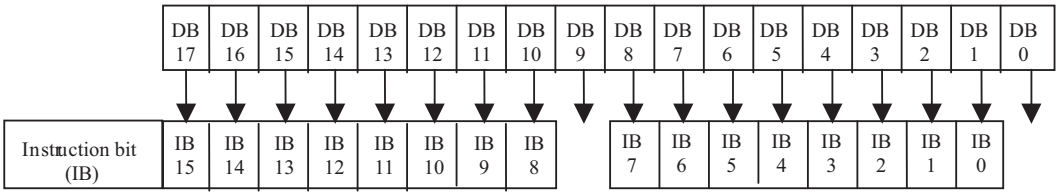

16-bit interface

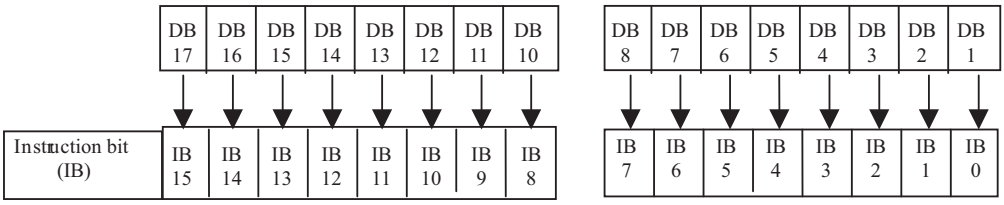

9-bit interface

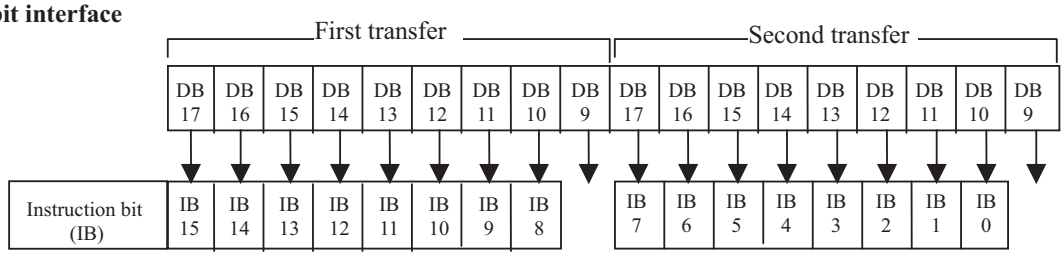

8-bit interface/SPI

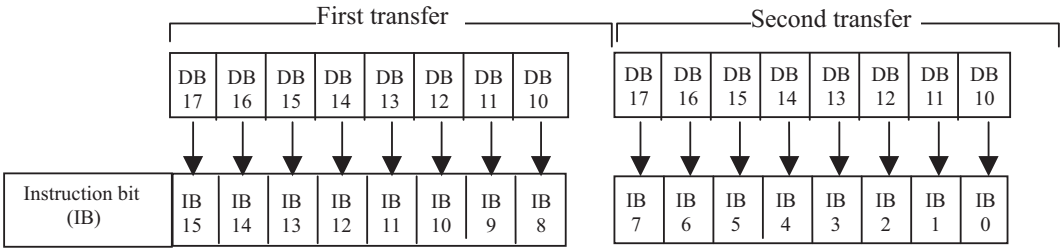

Instruction bit assignment

Instructions

The following are detail explanations of instructions with illustrations of instruction bits (IB15-0) assigned to each interface.

Index

The index instruction specifies a index (R00h to R3Bh) of control registers and RAM control, that is accessed. It sets the register number from 0000000 to 11111111 in binary form. Do not try to access to the register to which instruction is not assigned.

R/W	RS	IB15	IB14	IB13	IB12	IB11	IB10	IB9	IB8	IB7	IB6	IB5	IB4	IB3	IB2	IB1	IB0
W	0	*	*	*	*	*	*	*	*	*	ID6	ID5	ID4	ID3	ID2	ID1	ID0

Status Read

The status read instruction reads the internal status of the HD66773R.

L7–0: Indicate the position of raster-row driving liquid crystal.

R/W	RS	IB15	IB14	IB13	IB12	IB11	IB10	IB9	IB8	IB7	IB6	IB5	IB4	IB3	IB2	IB1	IB0
R	0	L7	L6	L5	L4	L3	L2	L1	L0	0	0	0	0	0	0	0	0

Start Oscillation (R00h)

The start oscillation instruction restarts the oscillator in a halt state during standby mode. After executing this instruction, wait at least 10 ms for stabilizing oscillation before issuing a next instruction. For details, see the “Standby Mode” section.
“0773”H is read out, if this register is forced to read out.

R/W	RS	IB15	IB14	IB13	IB12	IB11	IB10	IB9	IB8	IB7	IB6	IB5	IB4	IB3	IB2	IB1	IB0
W	0	*	*	*	*	*	*	*	*	*	*	*	*	*	*	*	1
R	1	0	0	0	0	0	1	1	1	0	1	1	1	0	0	1	1

Driver Output Control (R01h)

R/W	RS	IB15	IB14	IB13	IB12	IB11	IB10	IB9	IB8	IB7	IB6	IB5	IB4	IB3	IB2	IB1	IB0
W	1	0	0	0	0	0	SM	GS	SS	0	0	0	NL4	NL3	NL2	NL1	NL0

GS: Select the shift direction of outputs from the gate driver. The scan order by the gate driver is changeable in accordance to the scan mode of gate driver. Select an optimum shift direction for the assembly.

SM: Set the scan order by the gate driver. Select an optimum scan order for the assembly. For details, see "Scan Mode Setting".

SS: Select the shift direction of outputs from the source driver. When SS = 0, the shift direction of outputs is from S1 to S396. When SS = 1, the shift direction of outputs is from S396 to S1. In addition to the shift direction, setting for both SS and BGR bits are required to change the assignment of R, G, B dots to the source driver pins. To assign R, G, B dots to the source driver pins interchangeably from S1, set SS = 0, BGR = 0. To assign R, G, B dots to the source driver pins interchangeably from S396, set SS = 1, BGR = 1.

NL4-0: Specify the number of LCD drive raster-rows. The number of drive raster-rows is adjusted by 8 multiple raster-rows. The mapping of addresses to GRAM is independent of this setting. Select the number of raster-rows so that the display size covers the size of a panel.

NL bits

NL4	NL3	NL2	NL1	NL0	Display Size	Number of LCD Driver Lines	Gate Driver Used
0	0	0	0	0	Setting disabled	Setting disabled	Setting disabled
0	0	0	0	1	396 x 16 dots	16	G1 to G16
0	0	0	1	0	396 x 24 dots	24	G1 to G24
0	0	0	1	1	396 x 32 dots	32	G1 to G32
0	0	1	0	0	396 x 40 dots	40	G1 to G40
0	0	1	0	1	396 x 48 dots	48	G1 to G48
0	0	1	1	0	396 x 56 dots	56	G1 to G56
0	0	1	1	1	396 x 64 dots	64	G1 to G64
0	1	0	0	0	396 x 72 dots	72	G1 to G72
0	1	0	0	1	396 x 80 dots	80	G1 to G80
0	1	0	1	0	396 x 88 dots	88	G1 to G88
0	1	0	1	1	396 x 96 dots	96	G1 to G96
0	1	1	0	0	396 x 104 dots	104	G1 to G104
0	1	1	0	1	396 x 112 dots	112	G1 to G112
0	1	1	1	0	396 x 120 dots	120	G1 to G120
0	1	1	1	1	396 x 128 dots	128	G1 to G128
1	0	0	0	0	396 x 136 dots	136	G1 to G136
1	0	0	0	1	396 x 144 dots	144	G1 to G144
1	0	0	1	0	396 x 152 dots	152	G1 to G152
1	0	0	1	1	396 x 160 dots	160	G1 to G160
1	0	1	0	0	396 x 168 dots	168	G1 to G168
1	0	1	0	1	396 x 176 dots	176	G1 to G176

Note 1) A blanking period which lasts 8H, where all gate lines output Vgoff level, will be inserted after driving all gate lines.

LCD Driving Waveform Control (R02h)

R/W	RS	IB15	IB14	IB13	IB12	IB11	IB10	IB9	IB8	IB7	IB6	IB5	IB4	IB3	IB2	IB1	IB0
W	1	0	0	0	0	FLD1	FLD0	B/C	EOR	0	0	NW5	NW4	NW3	NW2	NW1	NW0

FLD1-0: Specify the number of fields during n-field interlaced drive. For details, see “Interlaced Drive”.

FLD Bits

FLD1	FLD0	Number of Fields
0	0	Setting disabled
0	1	1 field
1	0	Setting disabled
1	1	3 fields

B/C: When B/C =0, a field AC waveform is generated. Alternation occurs every frame to drive liquid crystal. When B/C=1, alternation occurs every n raster-rows according to the settings in EOR and NW5-0 bits of the LCD driving waveform control register. For details, see “n-raster-row Inversion AC Drive”.

EOR: When EOR = 1 and a C-pattern waveform is generated (B/C =1), an odd/even frame select signal and an n-raster-row inversion signal are AC-driven. This instruction is available when liquid crystal AC drive is not made depending on the combination of numbers of LCD drive raster-rows and the value of “n” of n-raster-row inversion AC drive. For details, see “n-raster-row inversion AC drive”.

NW5-0: Specify n, the number of raster-rows from 1 to 64 to alternate every n+1 raster-rows when C-pattern waveform is generated (B/C = 1).

Power Control 1 (R03h)

Power Control 2 (R04h)

R/W	RS	IB15	IB14	IB13	IB12	IB11	IB10	IB9	IB8	IB7	IB6	IB5	IB4	IB3	IB2	IB1	IB0
W	1	0	0	0	0	0	BT2	BT1	BT0	DC2	DC1	DC0	AP2	AP1	AP0	SLP	STB
W	1	CAD	0	0	0	0	0	0	0	0	0	0	0	0	0	0	0

BT2–0: Change the step-up scale of the step-up circuit. Adjust the scale according to the voltage. Smaller scale consumes lesser current.

BT2	BT1	BT0	DDVDH Output	VGH Output	Note*	Capacitor connect pin
0	0	0	2 x Vci1	3 x Vci2	VGH = Vci1 x 6	DDVDH, VGH, VGL, VCL, C11±, C21±, C22±, C31±, C41±
0	0	1	2 x Vci1	4 x Vci2	VGH = Vci1 x 8	DDVDH, VGH, VGL, VCL, C11±, C21±, C22±, C23±, C31±, C41±
0	1	0	3 x Vci1	3 x Vci2	VGH = Vci1 x 9	DDVDH, VGH, VGL, VCL, C11±, C12±, C21±, C22±, C31±, C41±
0	1	1	3 x Vci1	2 x Vci2	VGH = Vci1 x 6	DDVDH, VGH, VGL, VCL, C11±, C12±, C21±, C22±, C31±, C41±
1	0	0	2 x Vci1	Vci1 + 2 x Vci2	VGH = Vci1 x 5	DDVDH, VGH, VGL, VCL, C11±, C21±, C22±, C31±, C41±
1	0	1	2 x Vci1	Vci1 + 3 x Vci2	VGH = Vci1 x 7	DDVDH, VGH, VGL, VCL, C11±, C21±, C22±, C23±, C31±, C41±
1	1	0	Step-up disabled	3 x Vci2	VGH = Vci2 x 3	DDVDH, VGH, VGL, VCL, C21±, C22±, C31±, C41±
1	1	1	Setting disabled	Setting disabled	Setting disabled	—

Note*) The VGH is stepped-up from Vci1, which is the voltage level when DDVDH and Vci2 is short-circuited. The VGH must be set to satisfy VDDVDH ≤ 5.5 V and VGH ≤ 16.5 V.

DC2–0: Select the operating frequency for the step-up circuit. The higher step-up frequency enhances the drive capacity of step-up circuit as well as the display quality, while the current consumption will increase. Adjust the frequency taking both the display quality and the current consumption into consideration.

DC2	DC1	DC0	Step-up Cycle of Step-up Circuit 1	Step-up Cycle in Step-up Circuits 2/3/4
0	0	0	DCCLK /16	DCCLK / 64
0	0	1	DCCLK / 32	DCCLK / 64
0	1	0	DCCLK / 64	DCCLK / 64
0	1	1	DCCLK / 32	DCCLK / 256
1	0	0	DCCLK / 16	DCCLK / 128
1	0	1	DCCLK / 32	DCCLK / 128
1	1	0	DCCLK / 64	DCCLK / 128
1	1	1	DCCLK / 64	DCCLK / 256

AP2–0: Adjust the amount of fixed current from the fixed current source in the operational amplifier circuit in the liquid crystal drive power supply. When the amount of fixed current is set large, the liquid crystal drive capacity is enhanced and the display quality will improve, while the current consumption will increase. Select an optimum amount of current taking both the display quality and the current consumption into account. During non-display operation, set AP2-0 = “000” to halt the operation of operational amplifier and step-up circuit to further reduce current consumption.

AP2	AP1	AP0	Amount of Current in Operational Amplifier
0	0	0	Halt operational amplifier and step-up circuit
0	0	1	Small
0	1	0	Small or medium
0	1	1	Medium
1	0	0	Medium or large
1	0	1	Large
1	1	0	Setting disabled
1	1	1	Setting disabled

SLP: When SLP = 1, the HD66773R enters into the sleep mode. In the sleep mode, internal display operation is halted except the R-C oscillator to reduce current consumption. No change is made to the GRAM data or instructions during the sleep mode, but it is retained.

STB: When STB = 1, the HD66773R enters into the standby mode. In the standby mode, display operation is completely halted, and all internal operation including the internal R-C oscillator and reception of external clock pulse, is halted. For details, see “Standby Mode”. Only instructions to access R03h including the standby bit and to start oscillation are accepted during the standby mode.

CAD: Make an appropriate setting for the structure of TFT panel holding capacitor.
Set CAD = “0” for Cst structure.
Set CAD = “1” for Cadd structure.

Power Control 3 (R0Ch)
Power Control 4 (R0Dh)
Power Control 5 (R0Eh)

R/W	RS	IB15	IB14	IB13	IB12	IB11	IB10	IB9	IB8	IB7	IB6	IB5	IB4	IB3	IB2	IB1	IB0
W	1	0	0	0	0	0	0	0	0	0	0	0	0	0	VC2	VC1	VC0
W	1	0	0	0	0	VRL3	VRL2	VRL1	VRL0	0	0	0	PON	VRH3	VRH2	VRH1	VRH0
W	1	0	0	VCOMG	VDV4	VDV3	VDV2	VDV1	VDV0	0	0	0	VCM4	VCM3	VCM2	VCM1	VCM0

VC2-0: Adjust reference voltage for VREG1OUT, VREG2OUT, and Vci1 to the level of Vci multiples. When VC2-0 = “111”, internal reference voltage generation is halted and an arbitrary level of voltage can be applied through Vci1.

VC2	VC1	VC0	VREG1OUT (reference, Vci1 output , REGP output voltage)
0	0	0	Vci
0	0	1	0.92 x Vci
0	1	0	0.87 x Vci
0	1	1	0.83 x Vci
1	0	0	0.76 x Vci
1	0	1	0.73 x Vci
1	1	0	0.68 x Vci
1	1	1	Vci1: Hi-Z REGP: GND

Note) Leave REGP open so that the voltage as specified above is output.

VRL3-0: Set the amplifying scale of VREG2OUT voltage (the reference voltage for Vgoff). The output from Vci voltage adjustment circuit can be amplified by –1.5 ~ –6.5 times.

VRL3	VRL2	VRL1	VRL0	VREG2OUT Voltage
0	0	0	0	Vci x –1.5
0	0	0	1	Vci x– 2.0
0	0	1	0	Vci x – 2.5
0	0	1	1	Vci x – 3.0
0	1	0	0	Vci x– 3.5
0	1	0	1	Vci x – 4.0
0	1	1	0	Vci x – 4.5
0	1	1	1	Halt
1	0	0	0	Vci x – 5.0
1	0	0	1	Vci x – 5.5
1	0	1	0	Vci x – 6.0
1	0	1	1	Vci x – 6.5
1	1	0	0	Setting inhibited
1	1	0	1	Setting inhibited
1	1	1	0	Setting inhibited
1	1	1	1	Halt

Note) Adjust Vci and VRL3-0 so that the VREG2OUT voltage is –16.0 V or more.

PON: Start operation of step-up circuit 3. To halt operation, set PON = 0. To start operation, set PON = 1.

VRH3-0: Set the amplifying scale of VLOUT1 voltage (the reference voltage for VCOM and grayscale voltage). The output from Vciout output amplifier can be amplified by 1.33 ~ 2.775 times.

VRH3	VRH2	VRH1	VRH0	VREG1OUT Voltage
0	0	0	0	REGP x 1.33
0	0	0	1	REGP x 1.45
0	0	1	0	REGP x 1.55
0	0	1	1	REGP x 1.65
0	1	0	0	REGP x 1.75
0	1	0	1	REGP x 1.80
0	1	1	0	REGP x 1.85
0	1	1	1	Halt
1	0	0	0	REGP x 1.900
1	0	0	1	REGP x 2.175
1	0	1	0	REGP x 2.325
1	0	1	1	REGP x 2.475
1	1	0	0	REGP x 2.625
1	1	0	1	REGP x 2.700
1	1	1	0	REGP x 2.775
1	1	1	1	Halt

Note) Adjust VC2-0 and VRH3-0 so that the VREG1OUT voltage is 5.0 V or less.

VCOMG: When VCOMG = 1, VcomL outputs a negative voltage up to –5V. When VCOMG = 0, the VcomL voltage is GND and negative-polarity amplifier is halted to reduce power consumption. When VCOMG = “0”, the setting in VDV4-0 is made invalid. In this case, make adjustment for the AC amplitudes of Vcom and Vgoff with VCM4-0, VocomH settings.

VDV4-0: Set the AC amplitude of Vcom and Vgoff during Vcom AC drive. The amplitude can be specified within the range of VREG1OUT x 0.6 ~ 1.23. When VCOMG = 0, this setting is invalid.

VDV4	VDV3	VDV2	VDV1	VDV0	Vcom Amplitude
0	0	0	0	0	VREG1OUT x 0.60
0	0	0	0	1	VREG1OUT x 0.63
0	0	0	1	0	VREG1OUT x 0.66
:	:	:	:	:	
0	1	1	0	0	VREG1OUT x 0.96
0	1	1	0	1	VREG1OUT x 0.99
0	1	1	1	0	VREG1OUT x 1.02
0	1	1	1	1	Setting disabled
1	0	0	0	0	VREG1OUT x 1.05
1	0	0	0	1	VREG1OUT x 1.08
1	0	0	1	0	VREG1OUT x 1.11
1	0	0	1	1	VREG1OUT x 1.14
1	0	1	0	0	VREG1OUT x 1.17
1	0	1	0	1	VREG1OUT x 1.20
1	0	1	1	0	VREG1OUT x 1.23
1	0	1	1	1	Setting disabled
1	1	*	*	*	

Note) Adjust VREG1OUT and VDV4-0 so that the Vcom and Vgoff amplitudes are 6.0 V or less.

VCM4-0: Set the VcomH voltage (The higher voltage during Vcom AC drive). The amplitude can be specified within the range of VREG1OUT x 0.4 ~ 0.98. When VCM4-0 = "1111", the internal volume adjustment operation is halted, and the VcomH voltage can be adjust by placing an external resistor at VcomR.

VCM4	VCM3	VCM2	VCM1	VCM0	VcomH Voltage
0	0	0	0	0	VREG1OUT x 0.40
0	0	0	0	1	VREG1OUT x 0.42
0	0	0	1	0	VREG1OUT x 0.44
:	:	:	:	:	
0	1	1	0	0	VREG1OUT x 0.64
0	1	1	0	1	VREG1OUT x 0.66
0	1	1	1	0	VREG1OUT x 0.68
0	1	1	1	1	Halt internal volume. Adjust by an external variable resistor VcomR.
1	0	0	0	0	VREG1OUT x 0.70
1	0	0	0	1	VREG1OUT x 0.72
1	0	0	1	0	VREG1OUT x 0.74
:	:	:	:	:	
1	1	1	0	0	VREG1OUT x 0.94
1	1	1	0	1	VREG1OUT x 0.96
1	1	1	1	0	VREG1OUT x 0.98
1	1	1	1	1	Halt internal volume. Adjust by an external variable resistor VcomR.

Note) Adjust VREG1OUT and VCM4-0 so that the VcomH voltage is the VDH level or less.

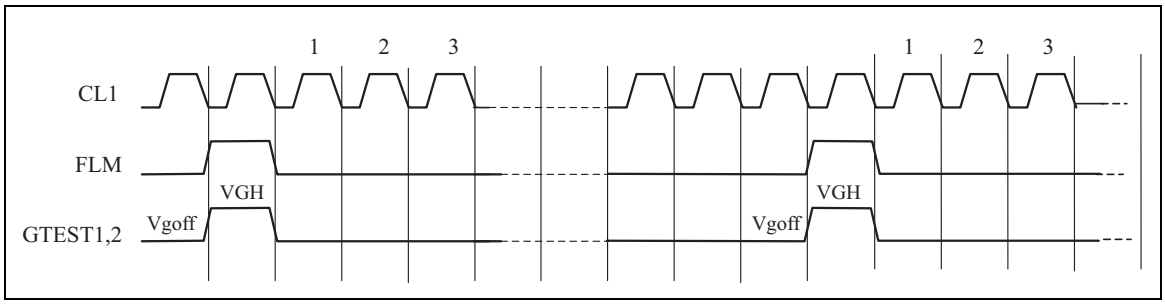

GTEST1, 2 Output Timing Chart

Entry Mode (R05h)

Compare Register (R06h)

R/W	RS	IB15	IB14	IB13	IB12	IB11	IB10	IB9	IB8	IB7	IB6	IB5	IB4	IB3	IB2	IB1	IB0
W	1	DIT	0	0	BGR	0	0	HWM	0	0	0	I/D1	I/D0	AM	LG2	LG1	LG0
W	1	CP15	CP14	CP13	CP12	CP11	CP10	CP9	CP8	CP7	CP6	CP5	CP4	CP3	CP2	CP1	CP0

The HD66773R modifies write data sent from the microcomputer before writing to GRAM. This enables high-speed GRAM data update, and reduces the load on the microcomputer software. For details, see "Graphics Operation Function".

HWM: When HWM=1, data are written to GRAM in high speed. In high-speed write mode, 4 words are written to GRAM in a single operation after executing 4 RAM write operations. If RAM write is terminated before it is executed 4 times, the last data will not be written. Make sure that RAM write is executed 4 times. For this reason, the lower 2 bits must be set to "0" when setting the RAM address. For details, "High-Speed RAM Write Mode".

I/D1-0: The address counter is automatically incremented by 1, after data are written to GRAM when I/D1-0 = "1". The address counter is automatically decremented by 1, after data are written to GRAM when I/D1-0 = "0". The setting for the increment or decrement of the address counter can be made independently for each upper and lower bits of the address. The transition direction of the address when data are written to GRAM is set with AM bits.

AM: Set the direction in which the address counter is updated automatically after data are written to GRAM. When AM = "0", the address counter is updated in the horizontal direction. When AM = "1", the address counter is updated in the vertical direction. When window addresses are specified, data are written to the GRAM area specified by the window address in the manner specified with I/D1-0, AM bits.

DIT: Hardware-dither mode when DIT = "1". Use hardware-dither mode with 18/9-bit interface modes.

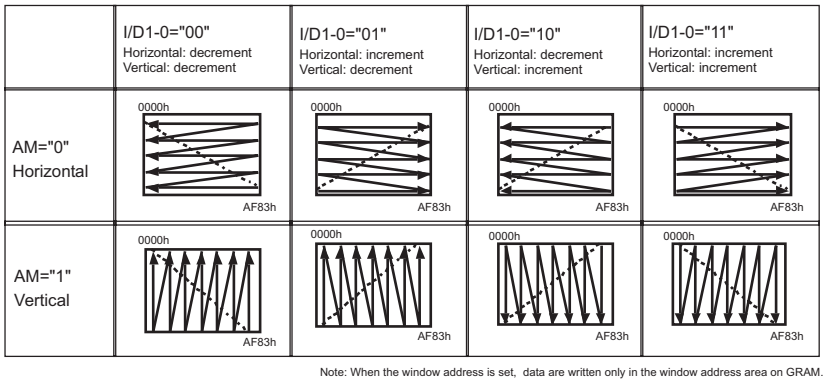

Address transition direction

LG2–0: Rewrite data to GRAM after comparing the data that are written by the microcomputer to GRAM with the values in the compare registers (CP17–0) and performing a logical operation. For details, see “Graphics Operation function”.

CP15–0: Set the value for the compare register, with which the data read out from GRAM or data written to GRAM by the microcomputer are compared. This function is not available with 18/19-bit interface modes. In 18/19-bit interface modes, make sure LG2-0 = “000”.

BGR: Reverse the order from R, G, B to B, G, R for GRAM data. When setting BGR = 1, CP15-0 and WM15-0 bits will be automatically changed to the same effect.

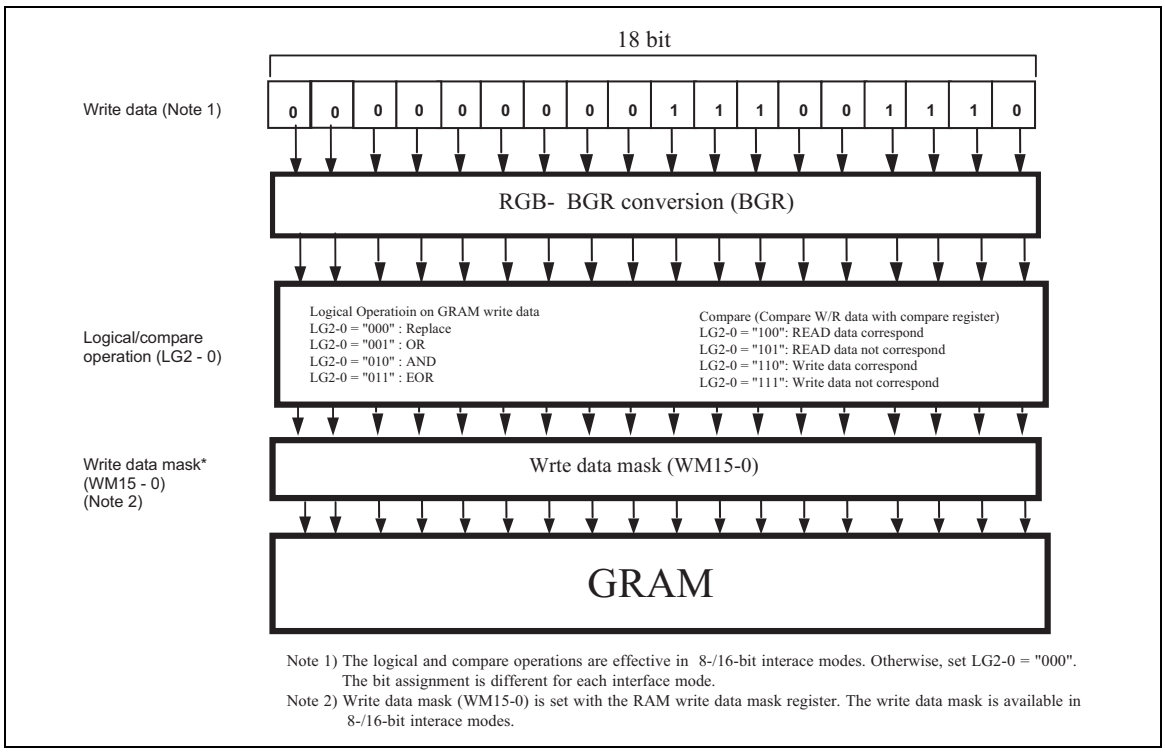

Note 1) The logical and compare operations are effective in 8-/16-bit interace modes. Otherwise, set LG2-0 = "000". The bit assignment is different for each interface mode.

Note 2) Write data mask (WM15-0) is set with the RAM write data mask register. The write data mask is available in 8-/16-bit interace modes.

Display Control 1 (R07h)

R/W	RS	IB15	IB14	IB13	IB12	IB11	IB10	IB9	IB8	IB7	IB6	IB5	IB4	IB3	IB2	IB1	IB0
W	1	0	0	0	PT1	PT0	VLE2	VLE1	SPT	0	0	GON	DTE	CL	REV	D1	D0

PT1-0: Specify the kind of source output when non-display area is driven in the partial display mode. For details, see “Screen-split drive function”.

VLE2–1: When VLE1 = 1, the first screen is scrolled in the vertical direction. When VLE2 = 1, the second screen is scrolled in the vertical direction. The first and second screens cannot be scrolled simultaneously. This function is not available with external display interface mode.

VLE Bits

VLE2	VLE1	Image on 2nd Screen	Image on 1st Screen
0	0	Stationary	Stationary
0	1	Stationary	Scrolled
1	0	Scrolled	Stationary
1	1	Setting disabled	Setting disabled

CL: When CL = 1, 8-color display mode is selected. For details, see “8-Color Display Mode”.

CL Bit

CL	Colors
0	65,536
1	8

SPT: When SPT = 1, liquid crystal is driven with 2 split screens. For details, see “Screen Split Drive Function”.

REV: When REV = 1, a reverse display is shown. Inverting the grayscale levels allows the display of same data on both normally white and normally black panels. The source output level is as follows.

Combination with partial display

REV	GRAM data	Source output level							
		Display area		non-display area					
				PT1-0 = (0.*)		PT1-0= (1.0)		PT1-0 = (1.1)	
		VCOM =“L”	VCOM =”H”	VCOM=“L”	VCOM=”H”	VCOM =“L”	VCOM =“H”	VCOM =“L”	VCOM =“H”
0	16’h0000 ⋮ 16’hFFFF	V31 ⋮ V0	V0 ⋮ V31	V31	V0	GND	GND	Hi-z	Hi-z
1	16’h0000 ⋮ 16’hFFFF	V0 ⋮ V31	V31 ⋮ V0	V31	V0	GND	GND	Hi-z	Hi-z

Combination with D1-0 bits

REV	GRAM data	Source output level							
		D1-0 = (1.1)		D1-0 = (1.0)		D1-0 = (0.1)		D1-0 = (0.0)	
		VCOM =“L”	VCOM =“H”	VCOM =“L”	VCOM =“H”	VCOM =“L”	VCOM =“H”	VCOM =“L”	VCOM =“H”
0	16’h0000 ⋮ 16’hFFFF	V31 ⋮ V0	V0 ⋮ V31	V31	V0	GND	GND	GND	GND
1	16’h0000 ⋮ 16’hFFFF	V0 ⋮ V31	V31 ⋮ V0	V31	V0	GND	GND	GND	GND

GON: When GON = 0, the gate-off level is VGH.

D1–0: The graphics display is on when D1 = 1, and off when D1 = 0. When setting D1 = 0, the data are retained in GRAM. This means the graphics is instantly redisplayed when setting D1 to 1. When D1 is 0 (i.e., the display is off) all the source outputs are set to the GND level. This reduces the charged/discharged current during liquid crystal AC drive.

When D1-0 = 01, the HD66773R continues internal display operation, even while the external display is off. When D1-0 = 00, both internal and external display operation are halted.
In combination with GON and DTE bits, D1-0 bits control ON/OFF of display. For details, see “Instruction Setting Flow”.

GON	DTE	D1	D0	HD66773R Internal Display Operation	Source output	Gate output
0	0	0	0	Halt	GND	VGH
0	0	0	1	Operate	GND	VGH
1	0	0	1	Operate	GND	VGOFF
1	0	1	1	Operate	Grayscale level output	VGOFF
1	1	1	1	Operate	Grayscale level output	Gate selective line: VGH, Gate non-selective line: VGOFF

Note 1) GRAM write operation from the microcomputer is irrelevant to the setting in D1–0.

Note 2) In the standby mode, D1–0 = “00. The setting in the register D1–0 is retained.

Frame Cycle Control (R0Bh)

R/W	RS	IB15	IB14	IB13	IB12	IB11	IB10	IB9	IB8	IB7	IB6	IB5	IB4	IB3	IB2	IB1	IB0
W	1	NO1	NO0	SDT1	SDT0	EQ1	EQ0	DIV1	DIV0	0	0	0	0	RTN3	RTN2	RTN1	RTN0

RTN3-0: Set the 1H (1 raster-row) period.

RTN Bits and Clock Cycles

RTN3	RTN2	RTN1	RTN0	Clock Cycles per Raster-row
0	0	0	0	16 clocks
0	0	0	1	17 clocks
0	0	1	0	18 clocks
		:		:
1	1	1	0	30 clocks
1	1	1	1	31 clocks

DIV1-0: Set the division ratio of clocks for internal operations (DIV1-0). Internal operations are in synchronization with the clock, the frequency of which is divided according to the DIV1-0 setting. When changing the number of drive raster-rows, adjust the frame frequency too. For details, see “Frame Frequency Adjustment Function”.

DIV1	DIV0	Division Ratio	Internal Operating Clock Frequency
0	0	1	fosc / 1
0	1	2	fosc / 2
1	0	4	fosc / 4
1	1	8	fosc / 8

fosc = R-C oscillation frequency

Formula for the frame frequency

$$\text{Frame frequency} = \frac{\text{fosc}}{\text{Clock cycles per raster-row} \times \text{division ratio} \times (\text{Line} + 8)} \text{ [Hz]}$$

fosc: R-C oscillation frequency
Line: number of drive raster-rows (NL bit)
Division ratio: DIV bit
Clock cycles per raster-row: RTN bit

EQ1-0: Set the period for equalization, where Vcom output becomes Hi-z.

EQ1	EQ0	Equalizing period
0	0	Not equalized
0	1	1 clock
1	0	2 clocks
1	1	3 clocks

Note) Equalizing is valid while VcomL is 0V or more. Otherwise, set EQ = “00”

SDT1-0: Determine the amount of delay for the source output from the falling edge of the gate output.

SDT1	SDT0	Delay Time for Source Signal
0	0	1 clock
0	1	2 clocks
1	0	3 clocks
1	1	4 clocks

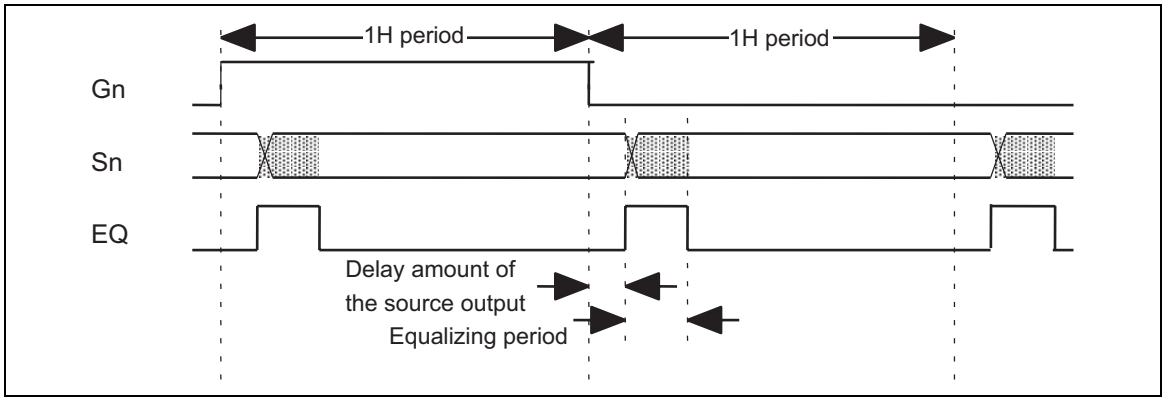

NO1-0: Specify the amount of non-overlap time for the gate output.

NO1	NO0	Non-overlap time
0	0	0 clock
0	1	4 clocks
1	0	6 clocks
1	1	8 clocks

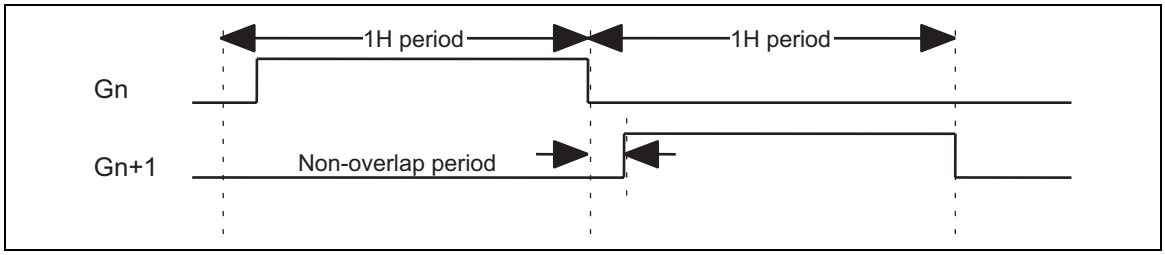

Gate Scan Position (R0Fh)

R/W	RS	IB15	IB14	IB13	IB12	IB11	IB10	IB9	IB8	IB7	IB6	IB5	IB4	IB3	IB2	IB1	IB0
W	1	0	0	0	0	0	0	0	0	0	0	0	SCN4	SCN3	SCN2	SCN1	SCN0

SCN4-0: Specify the position where the gate scan starts.

					Scan Start Position	
SCN4	**SCN3**	**SCN2**	**SCN1**	**SCN0**	**GS = 0**	**GS = 1**
0	0	0	0	0	G1	G176
0	0	0	0	1	G9	G168
0	0	0	1	0	G17	G160
. .	. .	. .	. .	. .	. .	. .
1	0	1	0	0	G161	G17
1	0	1	0	1	G169	G9

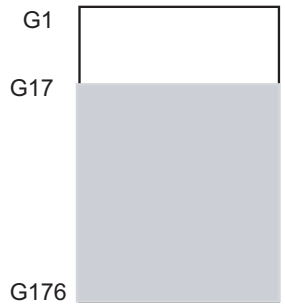

GS=0
NL=10011
SCN4-0=00010

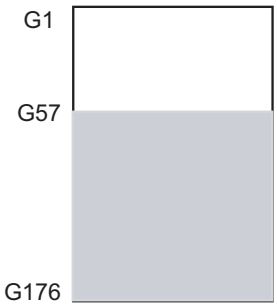

GS=0
NL=01110
SCN4-0=00111

Note: Set NL so that the gate scan end position does not exceed G176.

Vertical Scroll Control (R11h)

R/W	RS	IB15	IB14	IB13	IB12	IB11	IB10	IB9	IB8	IB7	IB6	IB5	IB4	IB3	IB2	IB1	IB0
W	1	0	0	0	0	0	0	0	0	VL7	VL6	VL5	VL4	VL3	VL2	VL1	VL0

VL7–0: Specify the number of raster-rows that are scrolled and control smooth scrolling in the vertical direction. The number of raster-rows is specified between 0 to 176, the raster-rows of the specified number are scrolled during display. When the 176th raster-row is displayed, the scrolling display starts afresh from the 1st raster-row. The number of raster-rows that are scrolled (VL7–0) can be specified when the first screen vertical scroll enable bit VLE1 = 1 or the second screen vertical scroll enable bit VLE2 = 1. The number of raster-rows is fixed (not changeable) when VLE2-1 = 00.

VL7	VL6	VL5	VL4	VL3	VL2	VL1	VL0	Amount of Scrolling (Number of raster-row)
0	0	0	0	0	0	0	0	0 raster-row
0	0	0	0	0	0	0	1	1 raster-row
0	0	0	0	0	0	1	0	2 raster-rows
.	.	.	.	.	.	.	.	.
.	.	.	.	.	.	.	.	.
1	1	1	0	1	1	1	0	174 raster-rows
1	1	1	0	1	1	1	1	175 raster-rows

Note: When setting the number of raster-rows for scrolling, it must be 175 (“AF”h) or less.

1st-Screen Drive Position (R14h)

2nd-Screen Drive Position (R15h)

R/W	RS	IB15	IB14	IB13	IB12	IB11	IB10	IB9	IB8	IB7	IB6	IB5	IB4	IB3	IB2	IB1	IB0
W	1	SE17	SE16	SE15	SE14	SE13	SE12	SE11	SE10	SS17	SS16	SS15	SS14	SS13	SS12	SS11	SS10
W	1	SE27	SE26	SE25	SE24	SE23	SE22	SE21	SE20	SS27	SS26	SS25	SS24	SS23	SS22	SS21	SS20

SS17–10: Specify the start position for driving the first screen by line. The liquid crystal is driven by from the gate driver of “the set value + 1”.

SE17–10: Specify the end position for driving the first screen by line. The liquid crystal is driven by to the gate driver of “the set value + 1”. For instance, when SS17–10 = “07”H and SE17–10 = “10”H, the liquid crystal is driven from G8 to G17, and black display is driven from G1 to G7, and G18 thereafter. Make sure that SS17–10 ≤ SE17–10 ≤ “AF”H. For details, see “Screen-split Drive Function”.

SS27–20: Specify the start position for driving the second screen by line. The liquid crystal is driven by from the gate driver of “the set value + 1”. The second screen is driven when SPT = 1.

SE27–20: Specify the end position for driving the second screen by line. The liquid crystal is driven by to the gate driver of "the set value + 1". For instance, when SPT = 1, and SS27–20 = "20"H, SE27–20 = "4F"H, the liquid crystal is driven from 33 to G80. Make sure that SS17–10 ≤ SE17–10 < SS27–20 ≤ SE27–20 ≤ "AEF"H. For details, see "Screen-split Drive Function".

Horizontal RAM Address Position (R16h)

Vertical RAM Address Position (R17h)

R/W	RS	IB15	IB14	IB13	IB12	IB11	IB10	IB9	IB8	IB7	IB6	IB5	IB4	IB3	IB2	IB1	IB0
W	1	HEA7	HEA6	HEA5	HEA4	HEA3	HEA2	HEA1	HEA0	HSA7	HSA6	HSA5	HSA4	HSA3	HSA2	HSA1	HSA0
W	1	VEA7	VEA6	VEA5	VEA4	VEA3	VEA2	VEA1	VEA0	VSA7	VSA6	VSA5	VSA4	VSA3	VSA2	VSA1	VSA0

HSA7-0/HEA7-0: Specify the start/end positions of the window-address range by address in the horizontal direction. Data are written to GRAM within the area determined by the addresses specified by HEA7-0 and HSA7-0. These addresses must be set before RAM write. In setting these bits, make sure that "00"h ≤ HSA7-0 ≤ HEA7-0 ≤ "83"h.

VSA7-0/VEA7-0: Specify the start/end positions of the window-address range by address in the vertical direction. Data are written to GRAM within the area determined by the addresses specified by VEA7-0 and VSA7-0. These addresses must be set before RAM write. In setting these bits, make sure that "00"h ≤ VSA7-0 ≤ VEA7-0 ≤ "AF"h.

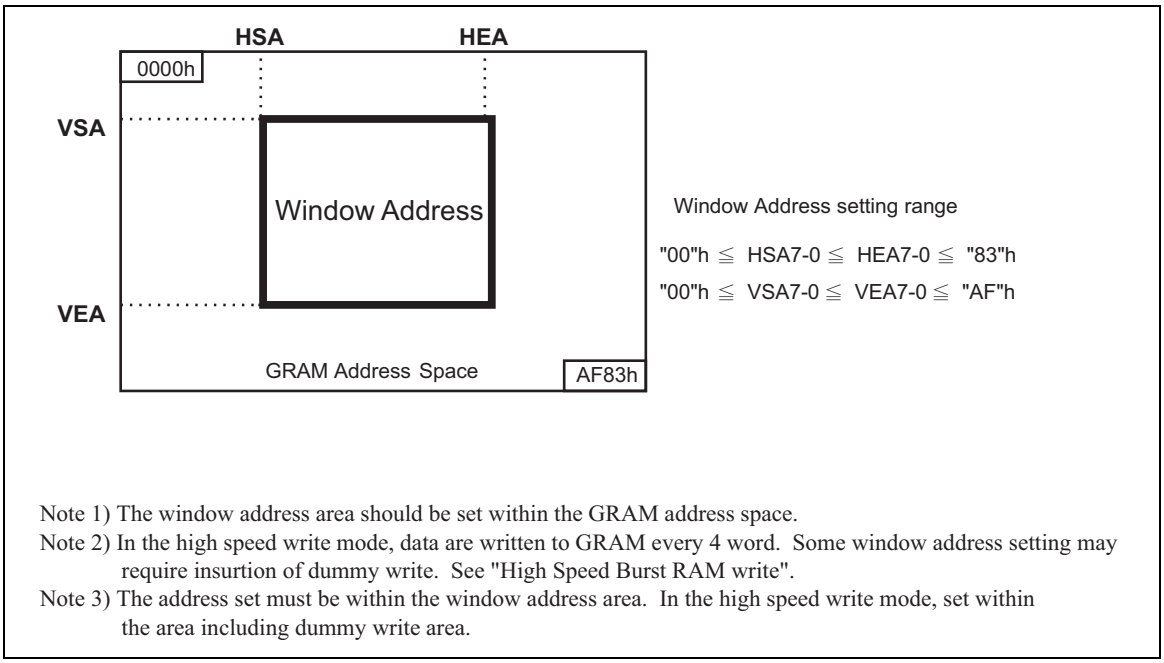

Note 1) The window address area should be set within the GRAM address space.
Note 2) In the high speed write mode, data are written to GRAM every 4 word. Some window address setting may require insurtion of dummy write. See "High Speed Burst RAM write".
Note 3) The address set must be within the window address area. In the high speed write mode, set within the area including dummy write area.

RAM Write Data Mask (R20h)

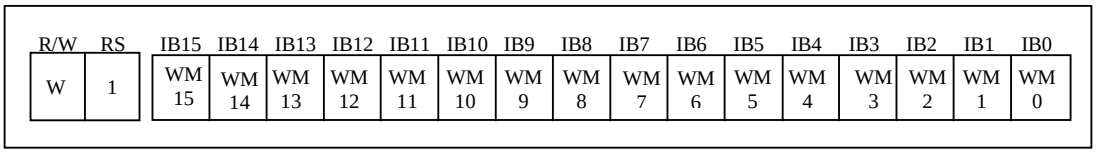

R/W	RS	IB15	IB14	IB13	IB12	IB11	IB10	IB9	IB8	IB7	IB6	IB5	IB4	IB3	IB2	IB1	IB0
W	1	WM 15	WM 14	WM 13	WM 12	WM 11	WM 10	WM 9	WM 8	WM 7	WM 6	WM 5	WM 4	WM 3	WM 2	WM 1	WM 0

WM15–0: Write-mask the data when written to GRAM by bit. The write-mask function is available with 8/16-bit interface modes. For example, if WM15 = 1, the data in WD15 bit is write-masked so that it is not written to GRAM. The rest of WM14-0 bits also write-mask the data in the corresponding WD bits when these bits are set to "1". For details, see "Graphics Operation Function".

RAM Address Set (R21h)

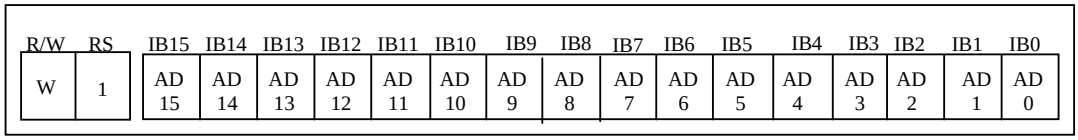

R/W	RS	IB15	IB14	IB13	IB12	IB11	IB10	IB9	IB8	IB7	IB6	IB5	IB4	IB3	IB2	IB1	IB0
W	1	AD 15	AD 14	AD 13	AD 12	AD 11	AD 10	AD 9	AD 8	AD 7	AD 6	AD 5	AD 4	AD 3	AD 2	AD 1	AD 0

AD15–0: Make a GRAM address initial setting in the address counter (AC). After GRAM data are written, the address counter is automatically updated according to the settings with AM, I/D bits and the setting for a new GRAM address is not required in the address counter. Therefore, data are written consecutively without resetting the address. The address counter is not automatically updated when data are read out from GRAM.

GRAM address setting can not be made during the standby mode. An address set should be made within the area specified with the window address.

GRAM Address Range

AD15–AD0	GRAM Setting
"0000"H – "0083"H	Bitmap data for G1
"0100"H – "0183"H	Bitmap data for G2
"0200"H – "0283"H	Bitmap data for G3
"0300"H – "0383"H	Bitmap data for G4
:	:
"AC00"H – "AC83"H	Bitmap data for G173
"AD00"H – "AD83"H	Bitmap data for G174
"AE00"H – "AE83"H	Bitmap data for G175
"AF00"H – "AF83"H	Bitmap data for G176

Write Data to GRAM (R22h)

R/W	RS																		
W	1	RAM write data (WD17-0) The pin assignment for DB17-0 varies for each interface (see below).																	
		PD17	PD16	PD15	PD14	PD13	PD12	PD11	PD10	PD9	PD8	PD7	PD6	PD5	PD4	PD3	PD2	PD1	PD0
When RGB-I/F		WD 17	WD 16	WD 15	WD 14	WD 13	WD 12	WD 11	WD 10	WD 9	WD 8	WD 7	WD 6	WD 5	WD 4	WD 3	WD 2	WD 1	WD 0

WD17–0: All data are expanded into 18 bits internally before being written to GRAM. Each interface has its own way of expanding data to 18 bits.

The grayscale level is selected according to GRAM data. The address is automatically updated according to the setting with the AM and I/D bits after data are written to GRAM. During the standby mode, no access is allowed to GRAM. When the 9 or 18 bit interface mode is selected, set DIT = "1" to activate the internal hardware-dither circuit before writing to GRAM.

18-bit interface 262,144 colors available

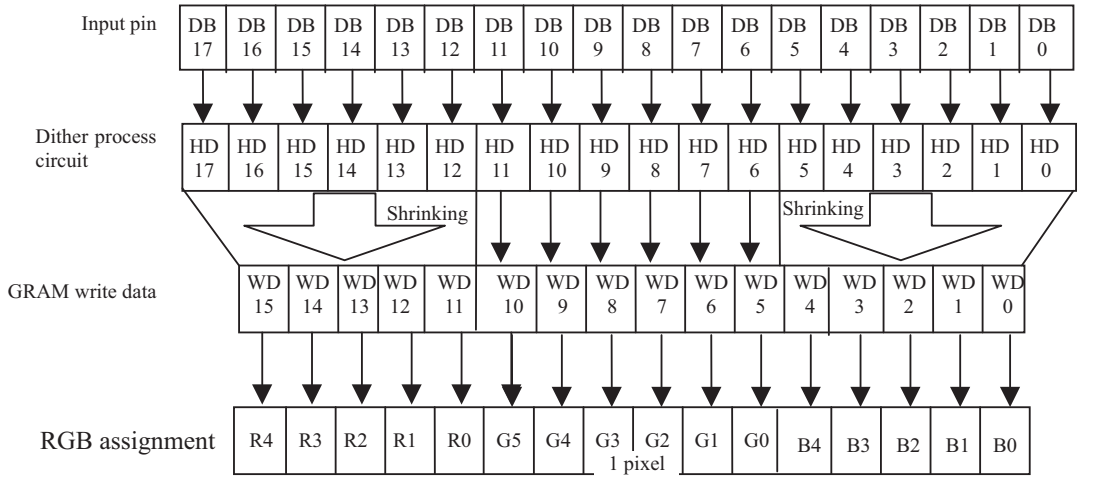

Note: Write data into GAM after setting DIT = "1".

16-bit interface 65,536 Colors available

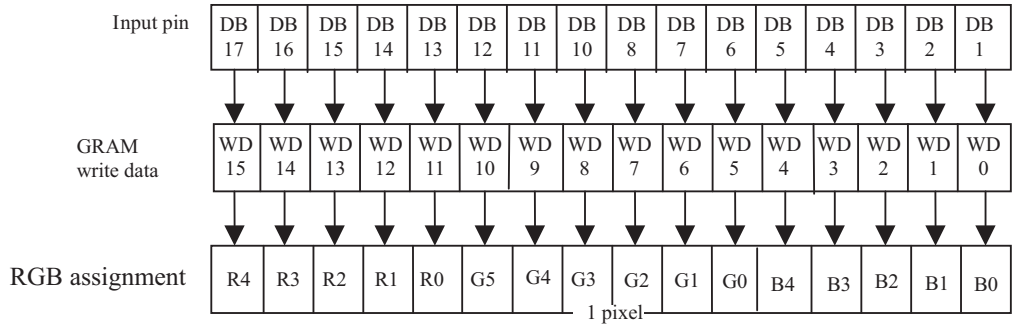

9-bit Interface 262,144 Colors available

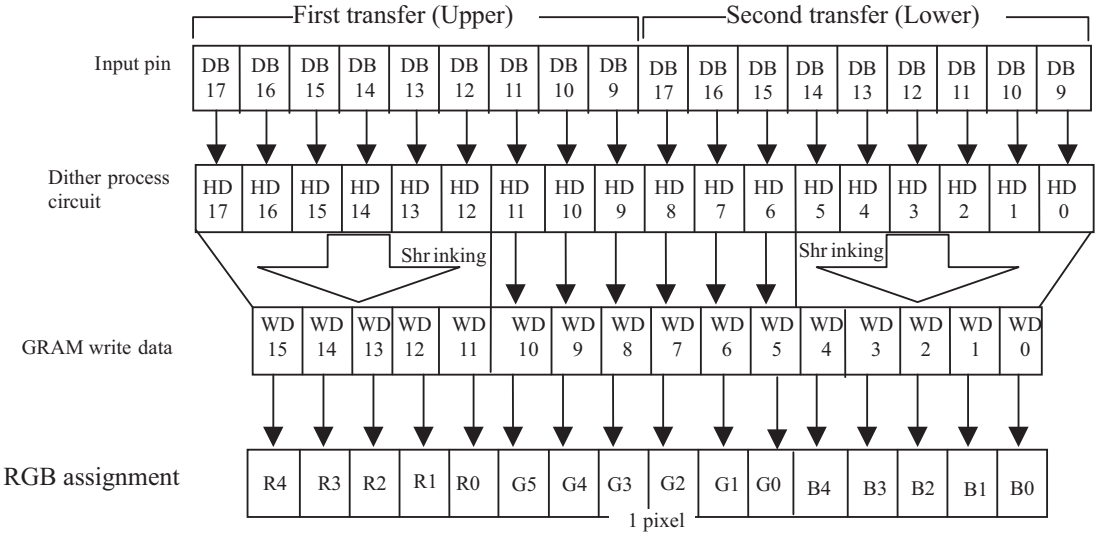

Note :Write data to GRAM after setting DIT = "1".

8-bit Interface 65,536 Colors available

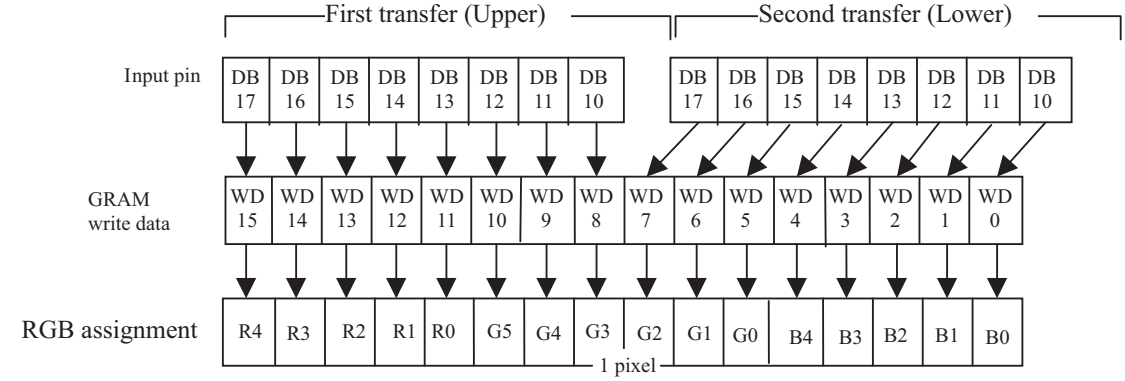

GRAM data and liquid crystal output level

GRAM Data Setting		Selected grayscale	
G	R/B	Negative	Positive
000000	00000	V0	V31
000001	-	V0 – V1	V31 - V30
000010	00001	V1	V30
000011	-	V1 –V2	V30 – V29
000100	00010	V2	V29
000101	-	V2 – V3	V29 – V28
000110	00011	V3	V2 8
000111	-	V3 – V4	V28 – V27
001000	00100	V4	V27
001001	-	V4 – V5	V27 – V26
001010	00101	V5	V26
001011	-	V5 – V6	V26 – V25
001100	00110	V6	V25
001101	-	V6 – V7	V25 – V24
001110	00111	V7	V24
001111	-	V7 – V8	V24 – V23

GRAM Data Setting		Selected grayscale	
G	R/B	Negative	Positive
010000	01000	V8	V23
010001	-	V8 – V9	V23 – V22
010010	01001	V9	V22
010011	-	V9 –V10	V22 – V21
010100	01010	V10	V21
010101	-	V10 – V11	V21 – V20
010110	01011	V11	V20
010111	-	V11 – V12	V20 – V19
011000	01100	V12	V19
011001	-	V12 – V13	V19 – V18
011010	01101	V13	V18
011011	-	V13 – V14	V18 – V17
011100	01110	V14	V17
011101	-	V14 – V15	V17 – V16
011110	01111	V15	V16
011111	-	V15 – V16	V16 – V15

GRAM Data Setting		Selected grayscale	
G	R/B	Negative	Positive
100000	10000	V16	V15
100001	-	V16 – V17	V15 – V14
100010	10001	V17	V14
100011	-	V17 –V18	V14 – V13
100100	10010	V18	V13
100101	-	V18 – V19	V13 – V12
100110	10011	V19	V12
100111	-	V19 – V20	V12 – V11
101000	10100	V20	V11
101001	-	V20 – V21	V11 – V10
101010	10101	V21	V10
101011	-	V21 – V22	V10 – V9
101100	10110	V22	V9
101101	-	V22 – V23	V9 – V8
101110	10111	V23	V8
101111	-	V23 – V24	V8 – V7

GRAM Data Setting		Selected grayscale	
G	R/B	Negative	Positive
110000	11000	V24	V7
110001	-	V24 – V25	V7 – V6
110010	11001	V25	V6
110011	-	V25 –V26	V6 – V5
110100	11010	V26	V5
110101	-	V26 – V27	V5 – V4
110110	11011	V27	V4
110111	-	V27 – V28	V4 – V3
111000	11100	V28	V3
111001	-	V28 – V29	V3 – V2
111010	11101	V29	V2
111011	-	V29 – V30	V2 – V1
111100	11110	V30	V1
111101	-	V30 – V31	V1 – V0
111110	11111	V31	V0
111111	-	V31	V0

Read Data from GRAM (R22h)

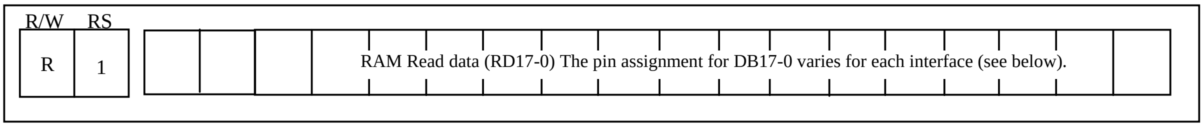

RD15–0: Read 16-bit data from GRAM. The bit assignment for the data that are read out from GRAM is different according to the interface.

When data are read out from GRAM to the microcomputer, the first word read immediately after GRAM address set are latched in the internal read-data latch, and the data in the data bus (DB17–0) are nullified. The second word is read as a valid data. When the HD66773R performs an internal bit processing, such as logical operation, it uses the data latched in the read-data latch, and completes it by single read out operation. The data are expanded internally into 18 bits before going through the logical operation. GRAM data read and logical operation are available with 8-/16-bit interface mode. If 9-/18-bit interface modes are selected, this function is not available.

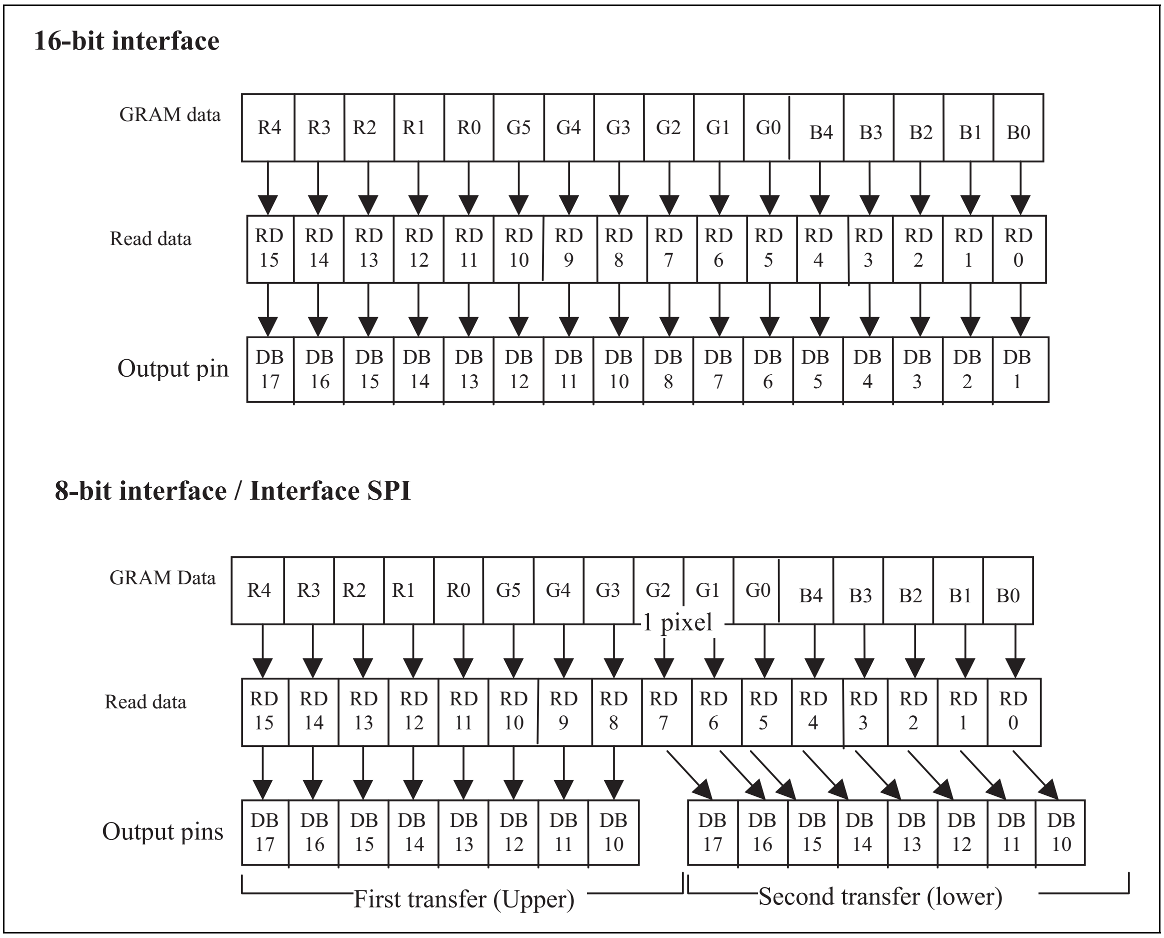

RENESAS

GRAM read sequence

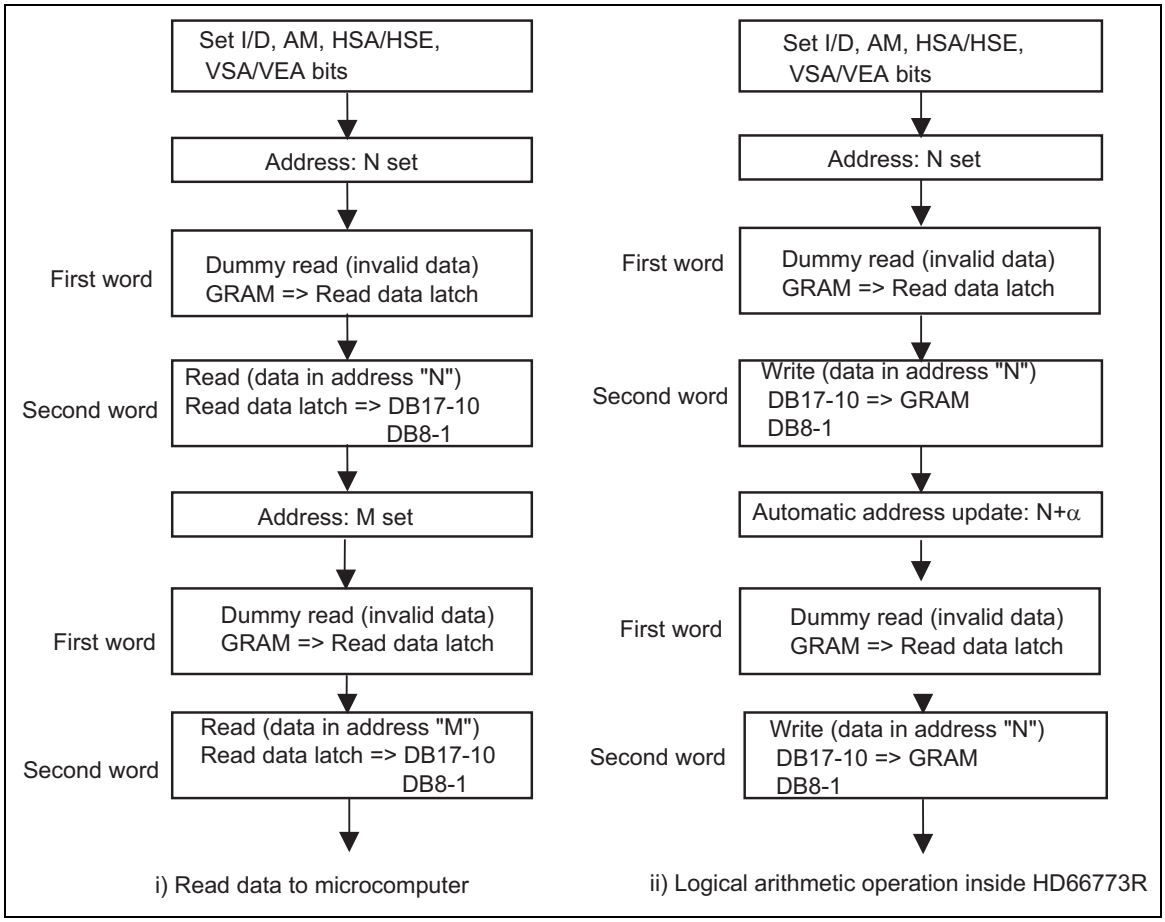

Gamma Control (R30h to R3Bh)

	R/W	RS	IB15	IB14	IB13	IB12	IB11	IB10	IB9	IB8	IB7	IB6	IB5	IB4	IB3	IB2	IB1	IB0
R30	W	1	0	0	0	0	0	PKP 12	PKP 11	PKP 10	0	0	0	0	0	PKP 02	PKP 01	PKP 00
R31	W	1	0	0	0	0	0	PKP 32	PKP 31	PKP 30	0	0	0	0	0	PKP 22	PKP 21	PKP 20
R32	W	1	0	0	0	0	0	PKP 52	PKP 51	PKP 50	0	0	0	0	0	PKP 42	PKP 41	PKP 40
R33	W	1	0	0	0	0	0	PRP 12	PRP 11	PRP 10	0	0	0	0	0	PRP 02	PRP 01	PRP 00
R34	W	1	0	0	0	0	0	PKN 12	PKN 11	PKN 10	0	0	0	0	0	PKN 02	PKN 01	PKN 00
R35	W	1	0	0	0	0	0	PKN 32	PKN 31	PKN 30	0	0	0	0	0	PKN 22	PKN 21	PKN 20
R36	W	1	0	0	0	0	0	PKN 52	PKN 51	PKN 50	0	0	0	0	0	PKN 42	PKN 41	PKN 40
R37	W	1	0	0	0	0	0	PRN 42	PRN 41	PRN 40	0	0	0	0	0	PRN 02	PRN 01	PRN 00
R3A	W	1	0	0	0	VRP 14	VRP 13	VRP 12	VRP 11	VRP 10	0	0	0	0	VRP 03	VRP 02	VRP 01	VRP 00
R3B	W	1	0	0	0	VRN 14	VRN 13	VRN 12	VRN 11	VRN 10	0	0	0	0	VRN 03	VRN 02	VRN 01	VRN 00

PKP52–00: Gamma fine adjustment register for the positive polarity output
PRP12-00: Gradient adjustment register for the positive polarity output
VRP14-00: Amplitude adjustment register for the positive polarity output
PKN52-00: Gamma fine adjustment register for the negative polarity output
PRN12-00: Gradient adjustment register for the negative polarity output
VRN14-00: Amplitude adjustment register for the negative polarity output.

For details, see “Gamma Adjustment Function”.

Instruction List

Register No.	Register	R/W	RS	Upper Code IB15	IB14	IB13	IB12	IB11	IB10	IB9	IB8	Lower Code IB7	IB6	IB5	IB4	IB3	IB2	IB1	IB0	Instructions
R	Index	0	0	*	*	*	*	*	*	*	*	*	ID6	ID5	ID4	ID3	ID2	ID1	ID0	Set index register values.
SR	Status read	1	0	L7	L6	L5	L4	L3	L2	L1	L0	0	0	0	0	0	0	0	0	Read out drive line position (L7-0).
R00h	Oscillation Start	0	1	*	*	*	*	*	*	*	*	*	*	*	*	*	*	*	1	Start oscillation diring standby.
	Device code read	1	1	0	0	0	0	0	1	1	1	0	1	1	1	0	0	1	1	Read out "0773H".
R01h	Driver output control	0	1	0	0	0	0	0	SM	GS	SS	0	0	0	NL4	NL3	NL2	NL1	NL0	Set the gate driver shift direction (GS), source drive shift direction (SS), and the position of drive line(NL4-0).
R02h	LCD drive AC control	0	1	0	0	0	0	FLD1	FLD0	B/C	EOR	0	0	NW5	NW4	NW3	NW2	NW1	NW0	Set liquid crystal drive AC wavefarm (B/C), the number of fields in interlace d drive (FLD1-0), the EOR output (EOR) during C-pattern AC drive, and the number of lines for AC drive "n" (NW5-0).
R03h	Power control (1)	0	1	0	0	0	0	0	BT2	BT1	BT0	DC2	DC1	DC0	AP2	AP1	AP0	SLP	STB	Set tandby mode (STB), LCD power supply ON (AP2-0), sleep mode (SLP), step-up cycle (DC2-0), and step-up output scale (BT3-0).
R04h	Power control (2)	0	1	CAD	0	0	0	0	0	0	0	0	0	0	0	0	0	0		Set the structure of holding capacity (CAD).
R05h	Entry mode	0	1	DIT	0	0	BGR	0	0	HWM	0	0	0	0	I/D0	AM	LG2	LG1	LG0	Set logical operation (LG2-0), AC counter mode (AM), increment/decrement (I/D1-0), high-speed write mode (HWM), BGR mode, hard-dither mode(DIT).
R06h	Compare register	0	1	CP15	CP14	CP13	CP12	CP11	CP10	CP9	CP8	CP7	CP6	CP5	CP4	CP3	CP2	CP1	CP0	Set compare registers (CP15-0).
R07h	Display control	0	1	0	0	0	PT1	PT0	VLE2	VLE1	SPT	0	0	GON	DTE	CL	REV	D1	D0	Set disply ON (DI1-0), reverse display (REV), display colors (CL), DISPTMG ENABLE (DTE), gate output on (GON), screen split control (SPT), vertical scroll (VLE2-1), and source output state (PT1-0).
R0Bh	Frame cycle control	0	1	NO1	NO0	SDT1	SDT0	EQ1	EQ0	DIV1	DIV0	0	0	0	0	RTN3	RTN2	RTN1	RTN0	Set 1H period (RTN3-0), operational clock division ratio (DIV1-0), Equalize period (EQ1-0), source output delay (SDT1-0), and gate output non-overlap (NO1-0).
R0Ch	Power control (3)	0	1	0	0	0	0	0	0	0	0	0	0	0	0	0	VC2	VC1	VC0	Set the Vci adjustment factor (VC2-0).
R0Dh	Power control (4)	0	1	0	0	0	0	VRL3	VRL2	VRL1	VRL0	0	0	0	PON	VRH3	VRH2	VRH1	VRH0	Start operation of step-up circuit 3 (PON), specify the amplifying scale of VREGOUT1 voltage (VRH3-0), and amplifying scale of VREGOUT2 voltage (VRL3-0).
R0Eh	Power control (5)	0	1	0	0	VCOMG	VDV4	VDV3	VDV2	VDV1	VDV0	0	0	0	VCM4	VCM3	VCM2	VCM1	VCM0	Set the Vcom H voltage (VCM4-0), the amplitude of Vgoff AC (VDV4-0), and the Vcom voltage (VCOMG).
R0Fh	Gate scan starting position	0	1	0	0	0	0	0	0	0	0	0	0	0	SCN4	SCN3	SCN2	SCN1	SCN0	Set the scan start position of gate driver (SCN4-0).
R11h	vertical scroll control	0	1	0	0	0	0	0	0	0	0	VL7	VL6	VL5	VL4	VL3	VL2	VL1	VL0	Set the screen scroll amount (VL7-0).
R14h	First display drive position	0	1	SE17	SE16	SE15	SE14	SE13	SE12	SE11	SE10	SS17	SS16	SS15	SS14	SS13	SS12	SS11	SS10	Set the start /end positions (SS17-10, SE17-10) of the first screen drive.
R15h	Second display drive position	0	1	SE27	SE26	SE25	SE24	SE23	SE22	SE21	SE20	SS27	SS26	SS25	SS24	SS23	SS22	SS21	SS20	Set the start /end positions (SS27-20, SE27-20) of the second screen drive.
R16h	Horizontal RAM address position	0	1	HEA7	HEA6	HEA5	HEA4	HEA3	HEA2	HEA1	HEA0	HSA7	HSA6	HSA5	HSA4	HSA3	HSA2	HSA1	HSA0	RAM address start/end positions (HSA7-0, HEA7-0) in holizontal direction.
R17h	Vertical RAM address position	0	1	VEA7	VEA6	VEA5	VEA4	VEA3	VEA2	VEA1	VEA0	VSA7	VSA6	VSA5	VSA4	VSA3	VSA2	VSA1	VSA0	RAM address start/end positions (VSA7-0, VEA7-0) in vertical direction.
R20h	RAM write data mask	0	1	WM15	WM14	WM13	WM12	WM11	WM10	WM9	WM8	WM7	WM6	WM5	WM4	WM3	WM2	WM1	WM0	Set write data mask (WM15-0) for RAM write.
R21h	RAM address set	0	1	AD15-8 (Upper)								AD7-0 (Lower)								Initialize Address Counter with RAM address.
R22h	RAM data write	1	1	Write Data (Upper)								Write Data (Lower)								Write data to RAM.
	RAM data read	1	1	Read Data (Upper)								Read Data (Lower)								Read data to RAM.
R30h	γ control (1)	0	1	0	0	0	0	0	PKP12	PKP11	PKP10	0	0	0	0	0	PKP02	PKP01	PKP00	Gamma control.
R31h	γ control (2)	0	1	0	0	0	0	0	PKP32	PKP31	PKP30	0	0	0	0	0	PKP22	PKP21	PKP20	Gamma control.
R32h	γ control (3)	0	1	0	0	0	0	0	PKP52	PKP51	PKP50	0	0	0	0	0	PKP42	PKP41	PKP40	Gamma control.
R33h	γ control (4)	0	1	0	0	0	0	0	PRP12	PRP11	PRP10	0	0	0	0	0	PRP02	PRP01	PRP00	Gamma control.
R34h	γ control (5)	0	1	0	0	0	0	0	PKN12	PKN11	PKN10	0	0	0	0	0	PKN02	PKN01	PKN00	Gamma control.
R35h	γ control (6)	0	1	0	0	0	0	0	PKN32	PKN31	PKN30	0	0	0	0	0	PKN22	PKN21	PKN20	Gamma control.
R36h	γ control (7)	0	1	0	0	0	0	0	PKN52	PKN51	PKN50	0	0	0	0	0	PKN42	PKN41	PKN40	Gamma control.
R37h	γ control (8)	0	1	0	0	0	0	0	PRN12	PRN11	PRN10	0	0	0	0	0	PRN02	PRN01	PRN00	Gamma control.
R3Ah	γ control (9)	0	1	0	0	0	VRP14	VRP13	PRP 12	VRP11	VRP10	0	0	0	0	0	VRP03	VRP02	VRP01	VRP00	Gamma control.
R3Bh	γ control (10)	0	1	0	0	0	VRN14	VRN13	VRN 12	VRN11	VRN10	0	0	0	0	0	VRN03	VRN02	VRN01	VRN00	Gamma control.

Note1) "*" is "Don't care".
Note2) High-speed write mode is available only with RAM write.

Reset Function

The HD66773R makes internal initial settings with RESET input. During the RESET, the HD66773R is in a busy state, and no instructions from the MPU and access to GRAM are accepted. The time required for the RESET input is at least 1ms. In case of power-on reset, wait at least 10ms after the power is turned on until the R-C oscillation frequency becomes stabilized. While waiting, do not make initial settings for the instruction set, nor access to GRAM.

Initial State of Instructions

a. Start oscillation
b. Driver output control (NL4–0 = “10101”, SS = “0”, CS = “0”)
c. Liquid crystal AC drive control (FLD1-0 = “01”, B/C = “0”, EOR = “0”, NW5–0 = “00000”)
d. Power control 1 (BT2-0 = “000”, DC2–0 = “000”, AP2–0 = “000”: liquid crystal power supply off, SLP = “0”, STB = “0” : Standby mode off)
e. Power control 2 (CAD = “0”)
f. Entry mode set (DIT = “0”, BGR = “0”, HWM = “0”, I/D1-0 = “11”: Increment by 1, AM = “0”: Horizontal direction, LG2–0 = “000”: Replace mode)
g. Compare register (CP15–0 : “0000 0000 0000 0000”)
h. Display control (PT1-0 = “00”, VLE2-1 = “00”: No vertical scroll, SPT = “0”, GON = “0”, DTE = “0”, CL = “0”: 262,144 colors, REV = “0”, D1-0 = “00”: Display OFF)
i. Power control 3 (VC2-0 = “000”)
j. Power control 4 (VRL3-0 = “0000”, PON = “0”, VRH3-0 = “0000”)
k. Power control 5 (VDV4-0 = “00000”, VCOMG = “0”, VCM4-0 = “00000”)
l. Frame cycle control (NO1-0 = “00”, SDT1-0 = “00”, EQ1-0 = “00” : No equalization, DIV1-0 = “00”: clock/1, RTN3-0 = “0000” : 16 clocks in 1H period)
m. Gate scan starting position (SCN4-0 = “00000”)
n. Vertical scroll (VL7–0 = “00000000”)
o. 1st split-screen (SE17-10 = “11111111”, SS17-10 = “00000000”)
p. 2nd split-screen (SE27-20 = “11111111”, SS27-20 = “00000000”)
q. Horizontal RAM address position (HEA7-0 = “10000011”, HSA7-0 = “00000000”)
r. Vertical RAM address position (VEA7-0 = “10101111”, VSA7-0 = “00000000”)
s. RAM write data mask (WM15–0 = “0000”H: No mask)
t. RAM address set (AD15–0 = “0000”H)
u. γ control
(PKP02-00 = “000”, PKP12-10 = “000”, PKP22-20 = “000”, PKP32-30 = “000”, PKP42-40 = “000”, PKP52-50 = “000”, PRP02-00 = “000”, PRP12-10 = “000”)
(PKN02-00 = “000”, PKN12-10 = “000”, PKN22-20 = “000”, PKN32-30 = “000”, PKN42-40 = “000”, PKN52-50 = “000”, PRN02-00 = “000”, PRN12-10 = “000”)
(VRP14-10 = “00000”, VRP03-00 = “0000”, VRN14-10 = “00000”, VRN12-10 = “000”)

GRAM Data Initialization

The data in GRAM are not initialized with the RESET input. Initialize through software during the display OFF (D1–0 = “00”).

Initial state of output pin

a. Liquid crystal driver output pins (source outputs): Output GND level
Liquid crystal driver output pins (gate outputs): Output VGH level

b. Oscillator output pin (OSC2): Output oscillation signal

System Interface

A system interface is selected among the following interfaces with the IM3-0 pin setting. The system interface enables instruction setting and RAM access.

IM3	IM2	IM1	IM0	MPU-Interface Mode	DB Pin
0	0	0	0	68-system 16-bit interface	DB17 to 10, 8-to-1
0	0	0	1	68-system 8-bit interface	DB17 to 10
0	0	1	0	80-system 16-bit interface	DB17 to 10, 8-to-1
0	0	1	1	80-system 8-bit interface	DB17 to 10
0	1	0	*	Serial Peripheral Interface (SPI)	DB1 to 0
0	1	1	*	Setting inhibited	—
1	0	0	0	68-system 18-bit interface	DB17-0
1	0	0	1	68-system 9-bit interface	DB17-9
1	0	1	0	80-system 18-bit interface	DB17-0
1	0	1	1	80-system 9-bit interface	DB17-9
1	1	*	*	Setting inhibited	—

18-bit interface

68-system 18-bit parallel data transmission becomes operable by setting IM3/2/1/0 pins to Vcc/GND/GND/GND levels respectively. 80-system 18-bit parallel data transmission becomes operable by setting IM3/2/1/0 pins to Vcc/GND/Vcc/GND levels respectively. The data transfer through 18-bit mode is effective only for write mode, and not effective for read operation.

18-bit bus interface

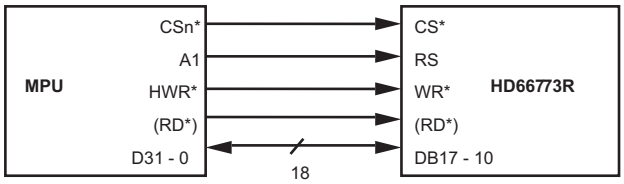

Data format for 18-bit bus interface

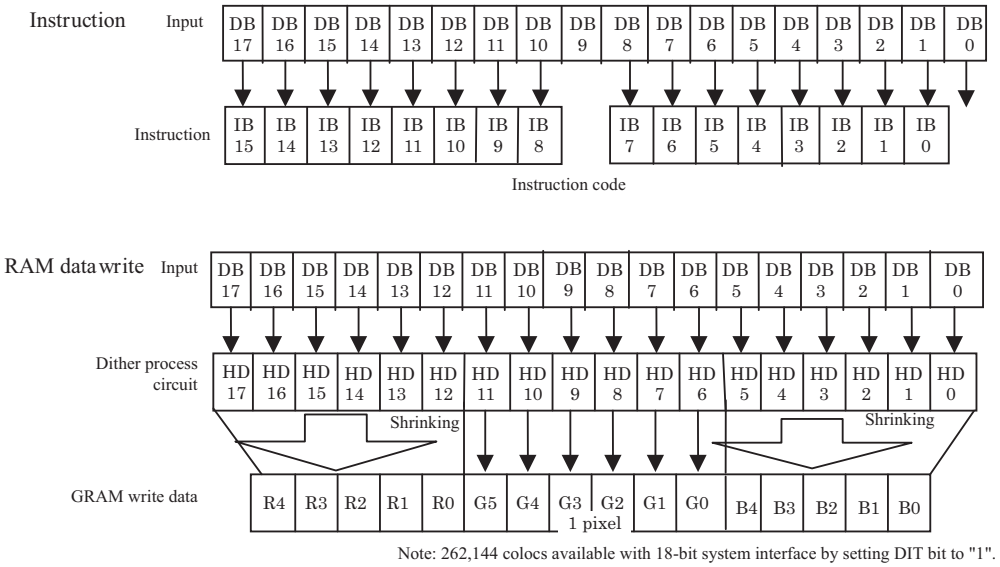

Note: 262,144 colocs available with 18-bit system interface by setting DIT bit to "1".

16-bit interface

68-system 16-bit parallel data transmission becomes operable by setting IM3/2/1/0 pins to GND/GND/GND/GND levels respectively. 80-system 16-bit parallel data transmission becomes operable by setting IM3/2/1/0 pins to GND/GND/Vcc/GND levels respectively.

16-bit interface

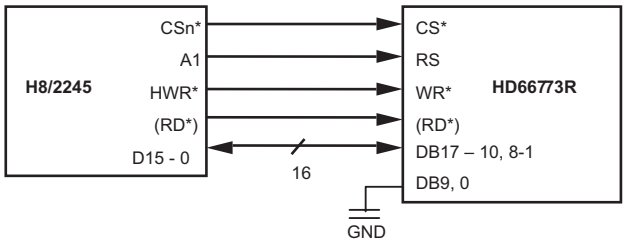

Data format for 16-bit interface

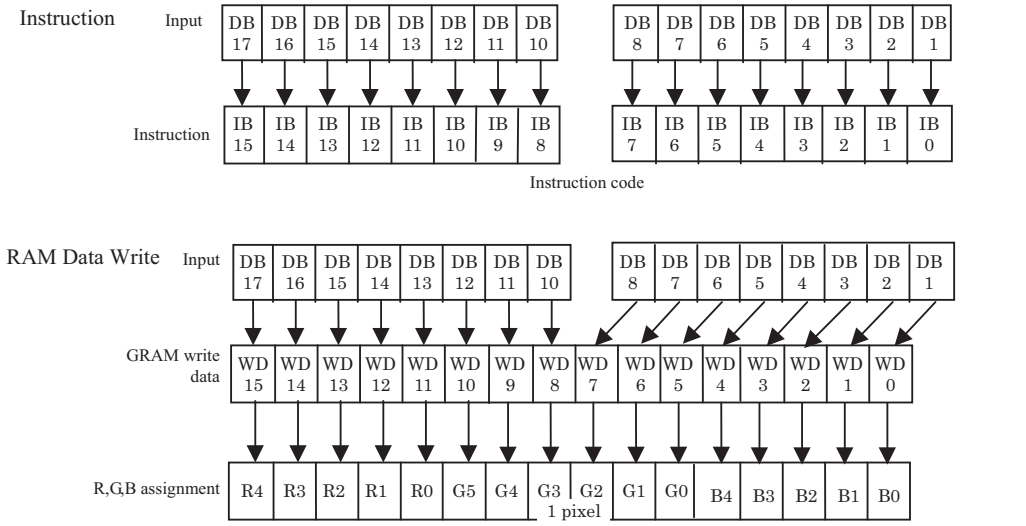

Note: 65,536-color real display with 16-bit system interface. Do not set DIT bit to "1".

9-bit interface

68-system 9-bit parallel data transmission becomes operable by setting IM3/2/1/0 pins to Vcc/GND/GND/Vcc levels respectively throughDB17-9 pins. 80-system 9-bit parallel data transmission becomes operable by setting IM3/2/1/0 pins to Vcc/GND/Vcc/Vcc levels respectively throughDB17-9 pins. The 16-bit instruction is divided into 2 8-bit data and upper 8-bit data is transferred first. The LSB is not used for each upper/lower-bit data transfer. The 18-bit RAM data is also divided into 2 9-bit data and upper 9-bit data is transferred first. The unused pins DB8-0 must be fixed to either “Vcc” or “GND”. The upper-byte write is also required when writing index registers. The data transfer through 9-bit mode is effective only for write mode, and not effective for read operation.

9-bit bus interface

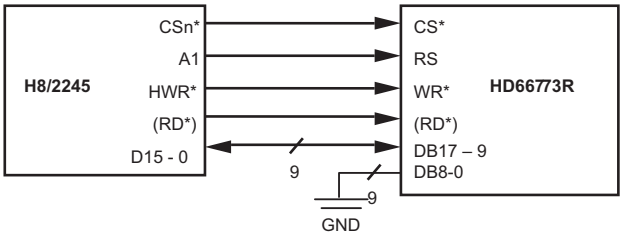

Data format for 9-bit bus interface

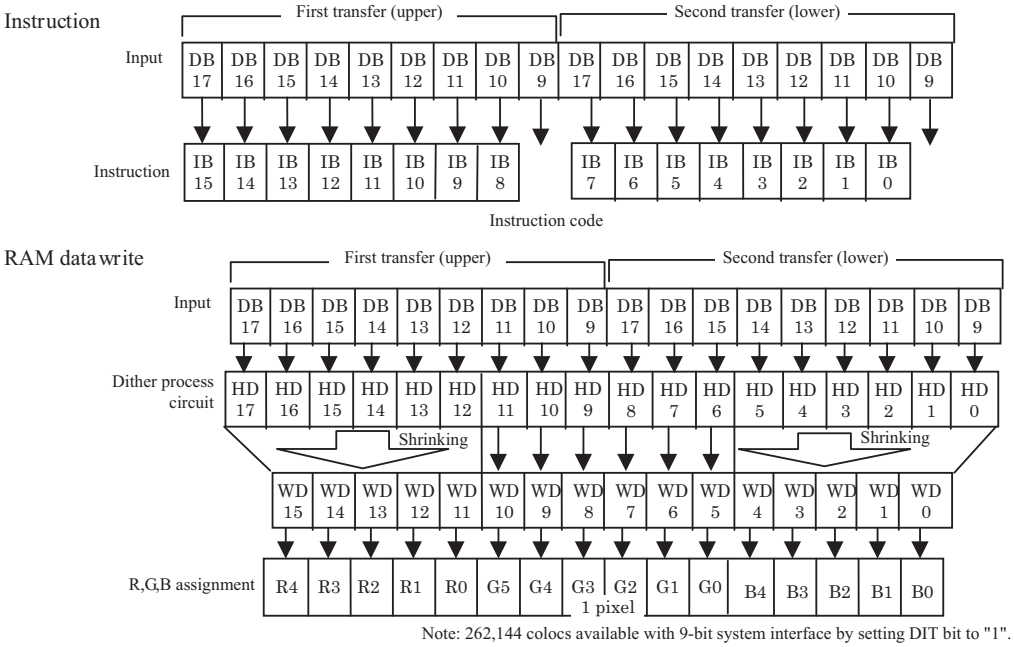

Note: 262,144 colocs available with 9-bit system interface by setting DIT bit to "1".

Data transmission synchronization in 9-bit bus interface mode

The HD66773R supports the data transmission synchronizing function, which resets the upper/lower counter that counts the number of transmission of upper/lower 9-bit data in the 9-bit bus interface mode. When a discrepancy occurs in the transmission of upper/lower 9-bit data due to effects from noise and so on, the “00” H instruction is written 4 times consecutively to forcibly reset the upper/lower counter so that data transmission restarts with an upper 9-bit transmission. Periodical execution of the synchronization allows the system recovery from the excursion.

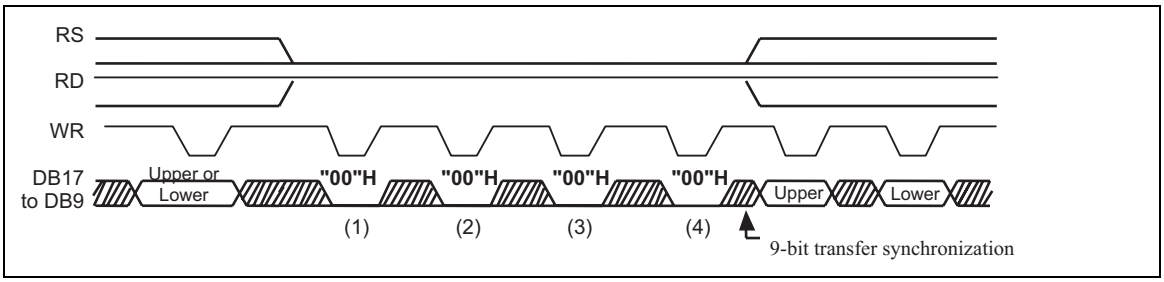

8-bit interface

68-system 8-bit parallel data transmission becomes operable by setting IM3/2/1/0 pins to GND/GND/GND/Vcc levels respectively throughDB17-10 pins. 80-system 8-bit parallel data transmission becomes operable by setting IM3/2/1/0 pins to GND/GND/Vcc/Vcc levels respectively throughDB17-10 pins. The 16-bit instruction is divided into 2 8-bit data and upper 8-bit data is transferred first. The LSB is not used for each upper/lower-bit data transfer. The 16-bit RAM data is also divided into 2 8-bit data and upper 9-bit data is transferred first. The unused pins DB9-0 must be fixed to either “Vcc” or “GND”. The upper-byte write is also required when writing index registers.

8-bit bus interface

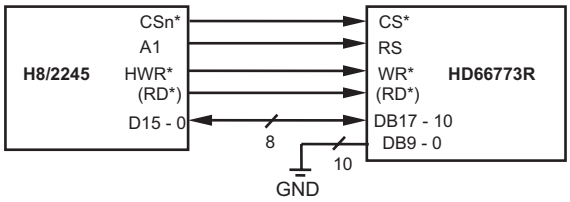

Data format for 8-bit bus interface

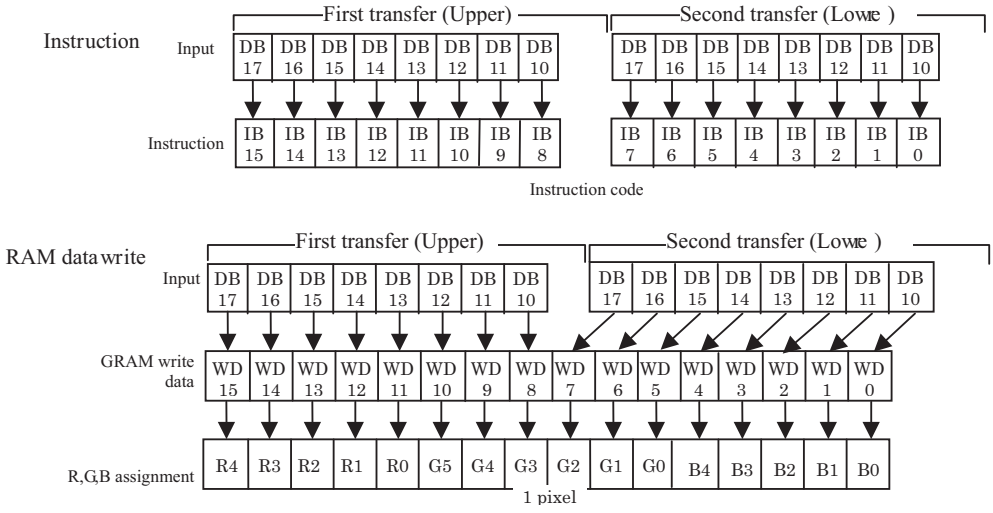

Note: 65,536-color real display with 8-bit system interface. Do not set DIT bit to "1".

Data transmission synchronization in 8-bit bus interface mode

The HD66773R supports the data transmission synchronizing function, which resets the upper/lower counter that counts the number of transmission of upper/lower 8-bit data in the 8-bit bus interface mode. When a discrepancy occurs in the transmission of upper/lower 8-bit data due to effects from noise and so on, the “00” H instruction is written 4 times consecutively to forcibly reset the upper/lower counter so that data transmission restarts with an upper 8-bit transmission. Periodical execution of the synchronization allows the system recovery from the excursion.

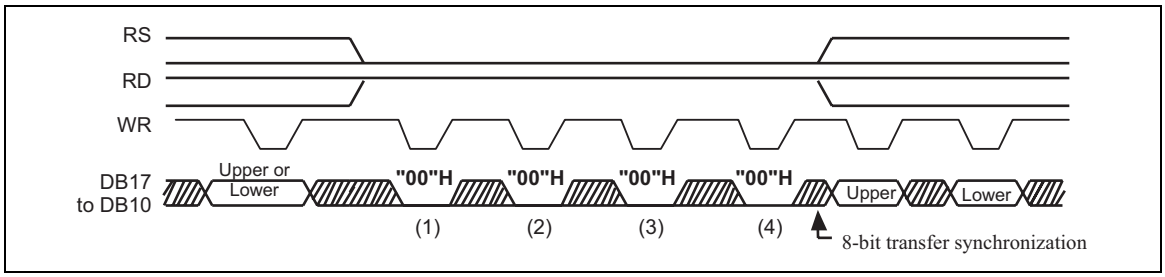

Serial Peripheral interface (SPI)

The Serial Peripheral Interface (SPI) becomes operable by setting IM3/2/1 pins to GND/Vcc/GND levels respectively. The SPI is available through the chip select line (CS*), serial transfer clock line (SCL), serial data input (SDI), and serial data output (SDO). In the SPI mode, the IM0/ID pin functions as ID pin. In the SPI mode, the unused DB15-2 pins must be fixed at either Vcc or GND level.

The HD66773R recognizes the start of data transfer at the falling edge of CS* input to initiate the transfer of a start byte. It recognizes the end of data transfer at the rising edge of CS* input. The HD66773R is selected when the 6-bit chip address in the start byte transferred from the transmission device and the 6-bit device identification code assigned to the HD66773R are compared and the both 6-bit data correspond. When selected, the HD66773R starts taking in the subsequent data string. The setting for the least significant bit of the identification code is made with the ID pin. The five upper bits of the identification code must be 01110. Two different chip addresses must be assigned to the HD66789 because the seventh bit of the start byte is assigned to a register select bit (RS). When RS = 0, index register write or status read is executed. When RS = 1, instruction write or RAM read/write is executed. The eighth bit of the start byte is to specify read or write (R/W bit). The data are received when the R/W bit is 0, and are transmitted when the R/W bit is 1.

In the SPI mode, the data are written to GRAM after the two-byte data transmission. The data are expanded into 18 bits by adding one bit (the same data as the MSB of RB) next to the LSB of RB data.

After receiving the start byte, the HD66773R starts data transmission/reception by byte. The data transmission adopts the format which the MSB is first transmitted. All HD66773R instructions consist of 16 bits and they are executed internally after two bytes are transmitted with the MSB first (DB15 to 0). The data to write to RAM are expanded into 18-bit data. After the start byte is received, the first byte is always fetched as the upper eight bits of the instruction and the second byte is fetched as the lower eight bits of the instruction. The 4-byte data that are read from RAM right after the start byte are made invalid. The HD66773R reads as valid data from the 5th-byte data.

Start Byte Format

Transmitted bits	S	1	2	3	4	5	6	7	8
Start byte format	Transmission start	Device ID code						RS	R/W
		0	1	1	1	0	ID		

Note 1) ID bit is selected with the IM0/ID pin.

RS and R/W Bit Function

RS	R/W	Function
0	0	Set index register
0	1	Read status
1	0	Write instruction or RAM data
1	1	Read instruction or RAM data

Data format for Serial Peripheral Interface

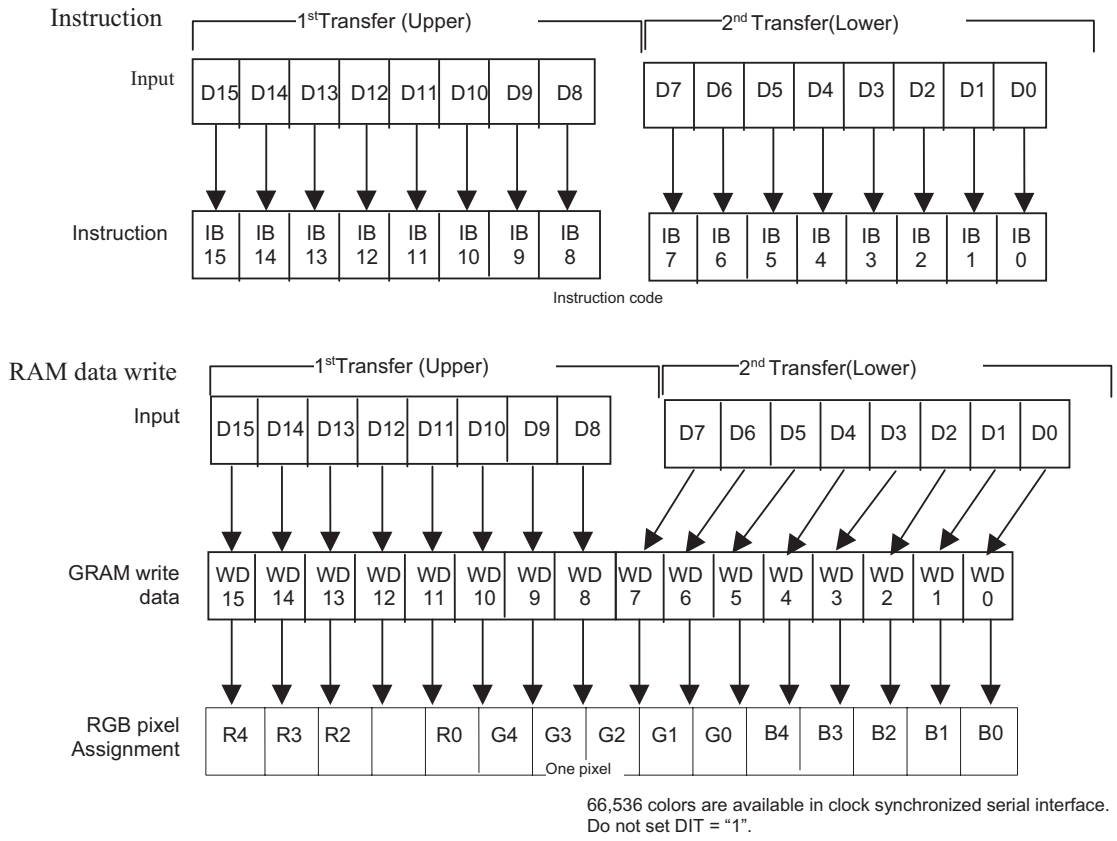

66,536 colors are available in clock synchronized serial interface.
Do not set DIT = "1".

a) Timing Basic Data Transfer through Clock Synchronized Serial Bus Interface

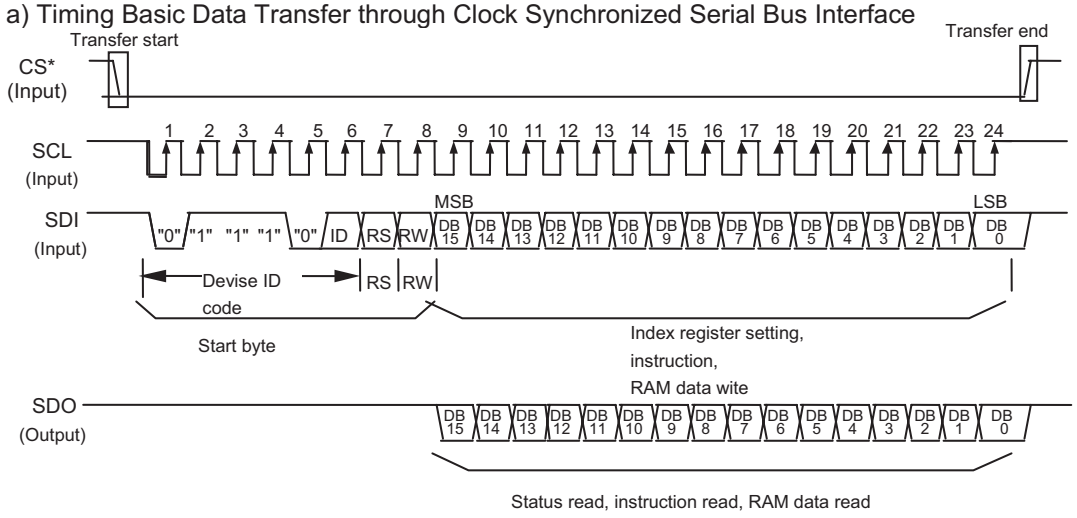

b) Timing of Consecutive Data-Transfer through Clock-synchronized serial Bus Interface

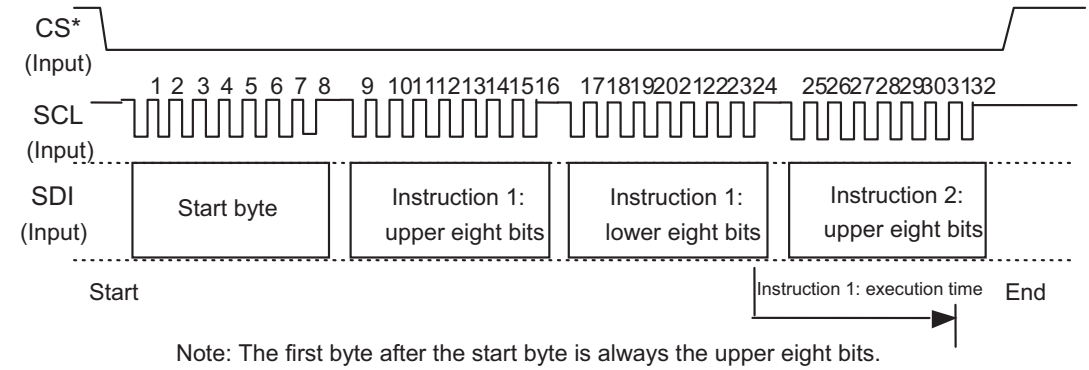

Note: The first byte after the start byte is always the upper eight bits.

c) RAM-Data Read-Transfer Timing

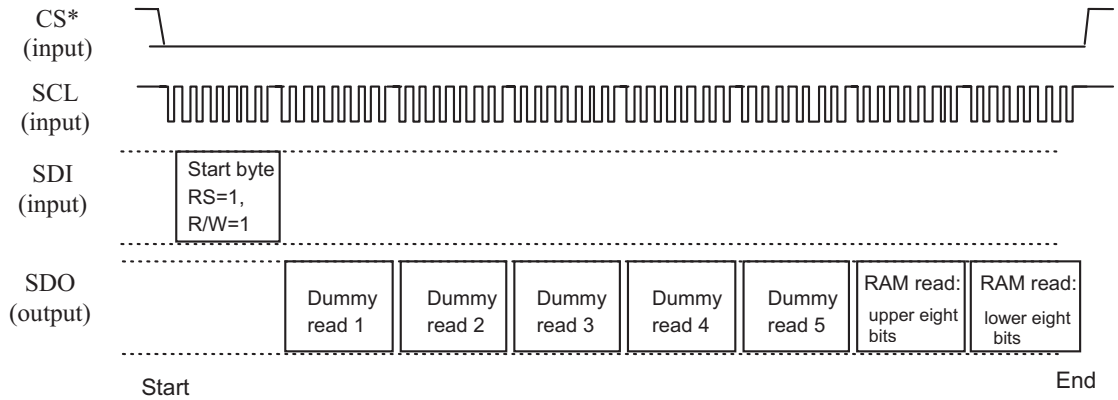

Note: The five-byte data following the start byte are read as invalid data. 73R
The HD66773R read the 6th-byte data as normal data.

d) Status Read / Instruction Read

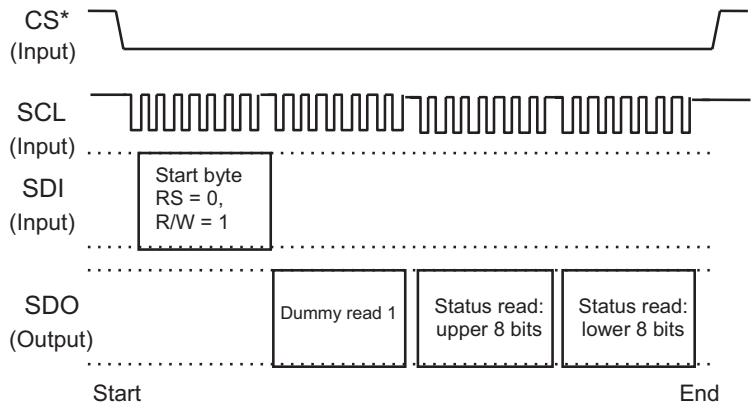

Note: The one-byte data read after the start byte is invalid.
The HD6677R starts to read the second-byte data as normal data.

High-Speed Burst RAM Write Function

The HD66773R incorporates the high-speed burst RAM-write function, which writes data to RAM in one-fourth the access time required for the standard RAM-write operation. This function is especially useful for applications which require the high-speed rewrite of the display data such as display of colored moving picture and so on.

In high-speed RAM write mode (HWM), data to write to RAM is temporarily stored to the internal register of HD66773R. The data storage in the register is executed by word. When the data storage operation is executed 4 times, all the data stored in the register is written to RAM at once. While the data is being written from the register to RAM, another set of data is being written to the register. This function enables high-speed and consecutive RAM write, which is required in displaying moving pictures and so on.

a)Operational flow of high-speed consecutive RAM write

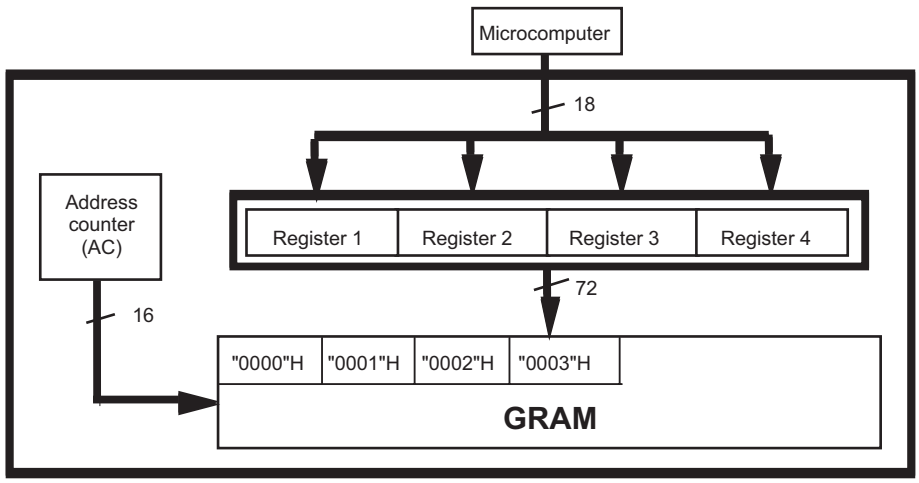

b) Example of high-speed consecutive RAM write

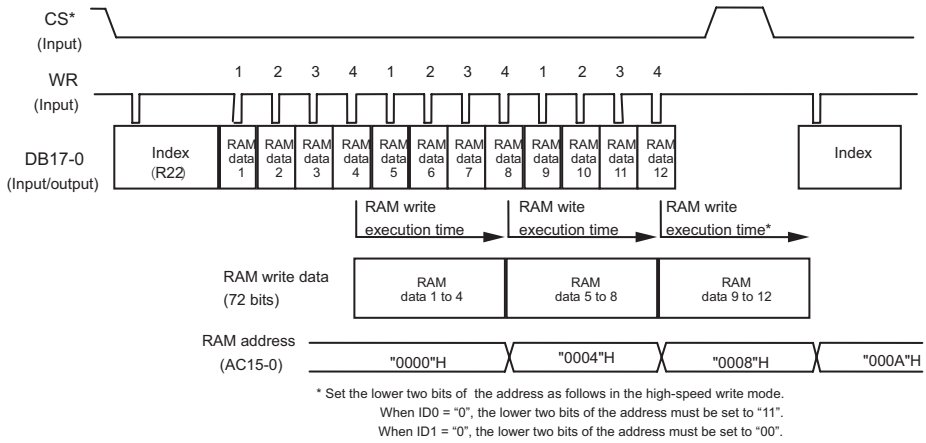

* Set the lower two bits of the address as follows in the high-speed write mode.
When ID0 = “0”, the lower two bits of the address must be set to “11”.
When ID1 = “0”, the lower two bits of the address must be set to “00”.

Note: When terminating high-speed RAM write, wait until RAM write execution is completed (tCYC: bus cycle time for nomal RAM write before executing a next instruction.

C) Example of high-speed consecutive RAM write

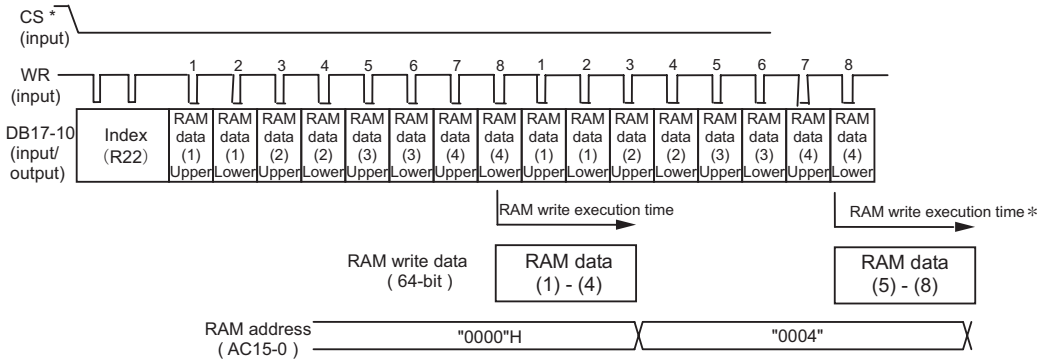

* Set the lower two bits of the address as follows in the high-speed write mode.
When ID0 = “0”, the lower two bits of the address must be set to “11”.
When ID1 = “0”, the lower two bits of the address must be set to “00”.

Note: The high-speed burst RAM write function wirtes data to RAM every 4 words. This means in the 8-bit interface mode, RAM write is executed every 8 write operations to the internal register.

Conditions on using high-speed RAM write mode

1. The logical/compare operations are not available.

2. RAM write operation is executed every four words. Set the lower 2 bits of the addresses as follows when setting addresses.

   *When ID0=0, the lower two bits in the address must be set to 11 before RAM write.
   *When ID0=1, the lower two bits in the address must be set to 00 before RAM write.

3. RAM write operation is executed every four words. If data write to the register is terminated before 4-word data are written, the last data will not be written to RAM.

4. When the index register is set to R22H (RAM data write), the first RAM write operation is always executed. In this case, the RAM data read is not operable simultaneously. During RAM read, set the HWM to 0.

5. The high-speed RAM write mode is not compatible with the normal RAM write mode. When the mode must be switched to the other, make a new address setting before starting RAM write.

6. When writing data in high speed RAM write mode within the range specified with the window address, some window-address range may require dummy write operation. See “High-Speed RAM Write with Window Address Function”.

Comparison between Normal and High-Speed RAM Write Operations

	Normal RAM Write (HWM=0)	**High-Speed RAM Write (HWM=1)**
Logical operation	Available in 8-/16-bit interface	Not available
Compare operation	Available in 8-/16-bit interface	Not available
BGR function	Available	Available
Write mask function	Available in 8-/16-bit interface	Available
RAM address set	Specified by one word	ID0 bit=0: Set the lower two bits to 11 ID0 bit=1: Set the lower two bits to 00
RAM read	Read by one word	Not available
RAM write	Write by one word	Some window-address range may require insertion of dummy write
Window address	Set by one word	Horizontal range(HSA/HSE): 4 word or more Number of horizontal writing : 4N (N>=2)
AM Setting	AM = 1/0	AM = 0

High-Speed RAM Write with Window Address

To rewrite the data in an arbitrary rectangular area of RAM consecutively in high speed, the number of RAM access should be made 4 multiple times. Accordingly some window-address range may require dummy write operation to make the RAM access 4 multiple times.

The horizontal window-address range specifying bits (HSA1-0, HEA1-0) specify the number of dummy write operations executed at the start and end of the data to write to RAM. The total RAM access must be 4 multiple times per line.

Number of Dummy Write Operations in High-Speed RAM Write (HSA Bits)

HSA1	HSA0	Number of Dummy Write Operations Inserted
0	0	0
0	1	1
1	0	2 times
1	1	3 times

Number of Dummy Write Operations in High-Speed RAM Write (HEA Bits)

HEA1	HEA0	Number of Dummy Write Operations Inserted
0	0	3 times
0	1	2 times
1	0	1 time
1	1	0

The number of RAM access when writing data in the horizontal direction must be made 4 × N times by including the dummy writes.
Horizontal RAM write = start dummy write + write data + end dummy write = 4 × N (times)

An example of RAM write in high speed RAM write mode with the window address is as follows.

The RAM data in the specified window-address range is written over consecutively in high speed by inserting two dummy writes at the start of the line and three dummy writes at the end of the line.

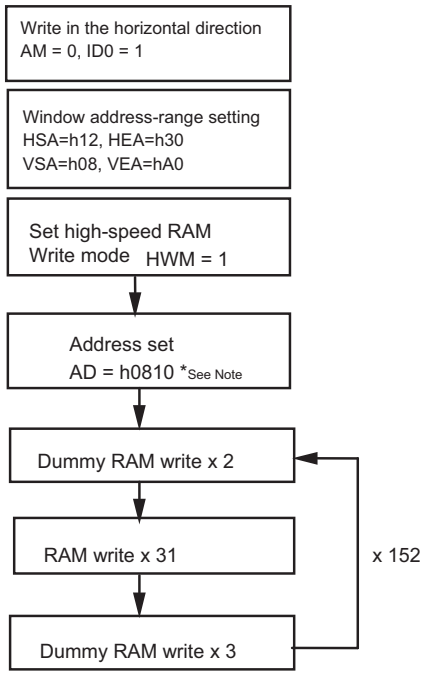

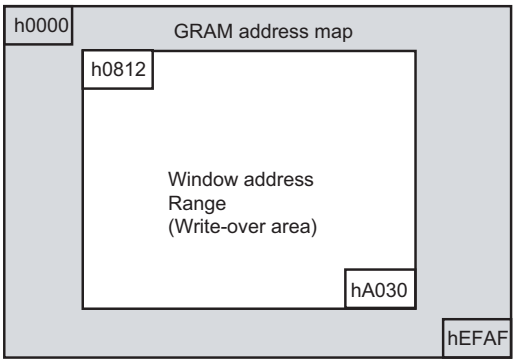

Window address-range setting
HSA=h12, HEA=h30
VSA=h08, VEA=hA0

*Note: Set the lower two bits of the address as follows in the high-speed write mode.
When ID0 = "0", the lower two bits of the address must be set to "11".
When ID1 = "0", the lower two bits of the address must be set to "00".

The RAM-address range to be overwritten is limited to the area specified with the window address.

Window Address Function

The window address function enables consecutive data write within the rectangular window-address area on the on-chip GRAM, which is specified with horizontal address registers (start: HSA7-0, end: HEA 7-0) and vertical address registers (start: VSA7-0, end: VEA7-0).

The address transition direction is determined with AM bits (either increment or decrement). Accordingly, the data, including picture data, are written consecutively without taking the data wrap position into consideration.

The window-address range must be specified within the GRAM address area. An address set must be set within the window-address range.

[The condition of setting window-address range]
(Horizontal direction) “00”H ≤ HSA7-0 ≤ HSA7-0 ≤ “83”H
(Vertical direction) “00”H ≤ VSA7-0 ≤ VEA7-0 ≤ “AF”H

[The condition of making an address set within the window-address range]
(RAM address) HSA7-0 ≤ AD7-0 ≤ HEA7-0
VSA7-0 ≤ AD15-8 ≤ VEA7-0

Note: In high-speed RAM write mode, the lower two bits of the address must be set as follows.
ID0=0: The lower two bits of the address must be set to 11.
ID0=1: The lower two bits of the address must be set to 00.

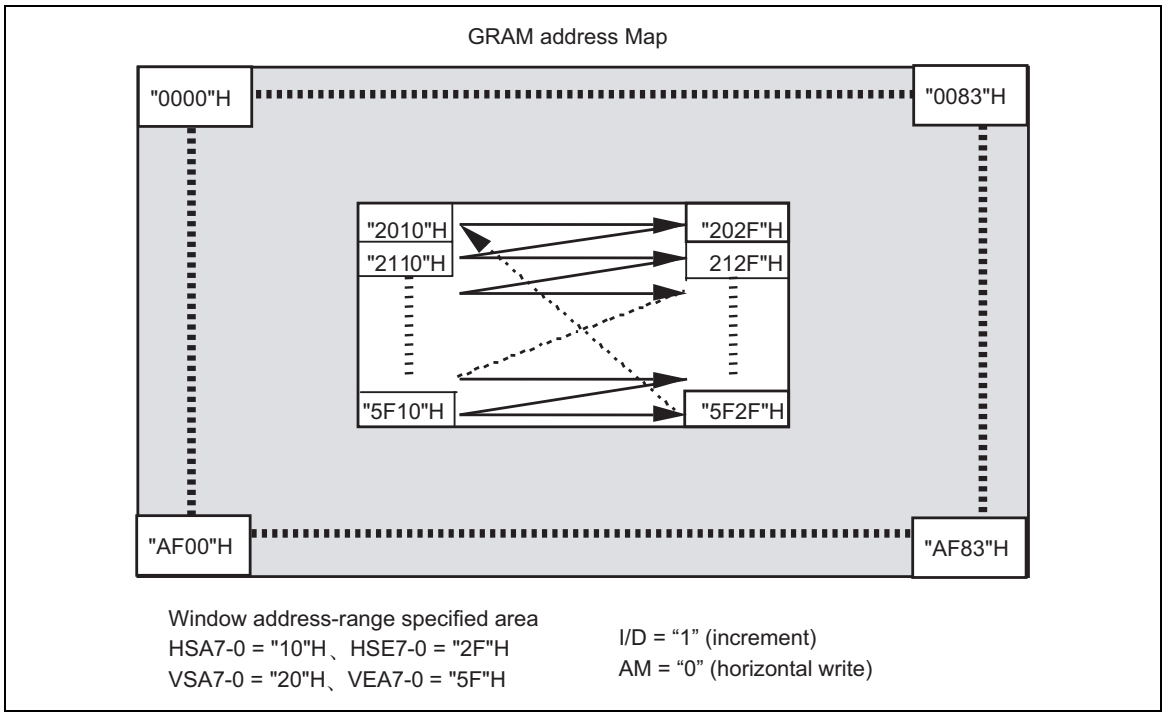

Graphics Operation Function

The HD66773R significantly reduces the load on the graphics-processing software in the microcomputer by incorporating internal graphic operation functions. The graphics operation includes:

1. The write data mask function that selectively rewrites some of the 16-bit write data.
2. Logical rewrite function to rewrite data after performing logical operation on the data from the microcomputer and graphics RAM base data.
3. The conditional rewrite function that compares the write data and the compare bit data and writes the data sent from the microcomputer only when the conditions are satisfied.

The graphics bit operation is controlled by the setting of bits in the entry mode register and RAM-write-data mask register, and the write operation from the microcomputer.

Graphics Operation

	Bit Setting			
Operation Mode	**I/D**	**AM**	**LG2–0**	**Operation and Usage**
Write mode 1	0/1	0	000	Horizontal data replacement, Draw a horizontal line
Write mode 2	0/1	1	000	Vertical data replacement, Draw a vertical line
Write mode 3	0/1	0	110 111	Horizontal conditional data replacement, Draw a horizontal line
Write mode 4	0/1	1	110 111	Vertical conditional data replacement Draw a vertical line
Read/Write mode 1	0/1	0	001 010 011	Horizontal logical write, Draw a horizontal line
Read/Write mode 2	0/1	1	001 010 011	Vertical logical write, Draw a vertical line
Read/Write mode 3	0/1	0	100 101	Horizontal conditional data replacement, Draw a horizontal line
Read/Write mode 4	0/1	1	100 101	Vertical conditional data replacement Draw a vertical line

Note) In 18-/9-bit interface modes, only write modes 1, 2 are effective. All operations are effective in 16-/8-bit interface modes.

Write-data Mask Function

The HD66773R supports write data mask function, which controls GRAM data write by bit when 16-bit data from the microcomputer is being written to GRAM. The write data mask function write data in the bits whose corresponding bits in the write data mask resister (WM15–0) are assigned with “0”. It does not write data in the bits whose corresponding bits in the write data mask register (WM15–0) are assigned with “1”, and the corresponding data in GRAM are not overwritten but retained. This function is useful when only one-pixel data are rewritten or a particular color in the display is selectively changed.

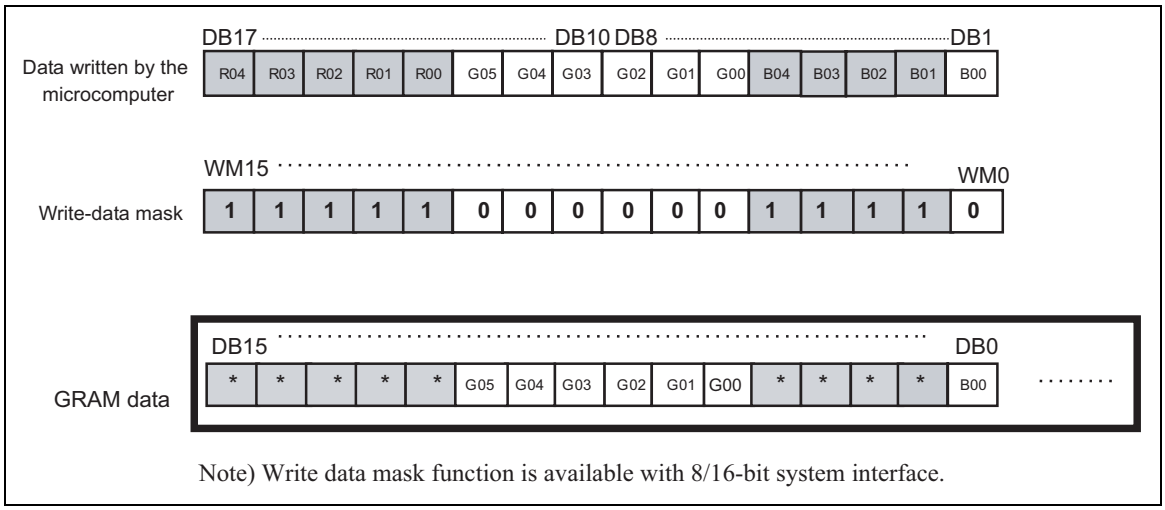

Note) Write data mask function is available with 8/16-bit system interface.

Graphics Operation Processing

1. Write mode 1: AM = 0, LG2–0 = 000

This mode is used when data are horizontally written in high-speed mode. It is also used to initialize the graphics RAM (GRAM) or to draw a line horizontally. The write-data mask function (WM15–0) is also available in these operations. After writing, the address counter (AC) automatically increments by 1 (I/D = 1) or decrements by 1 (I/D = 0), and jumps to the counter at the opposing edge of the next one-raster-row below after the counter reaches either left or right edge of GRAM.

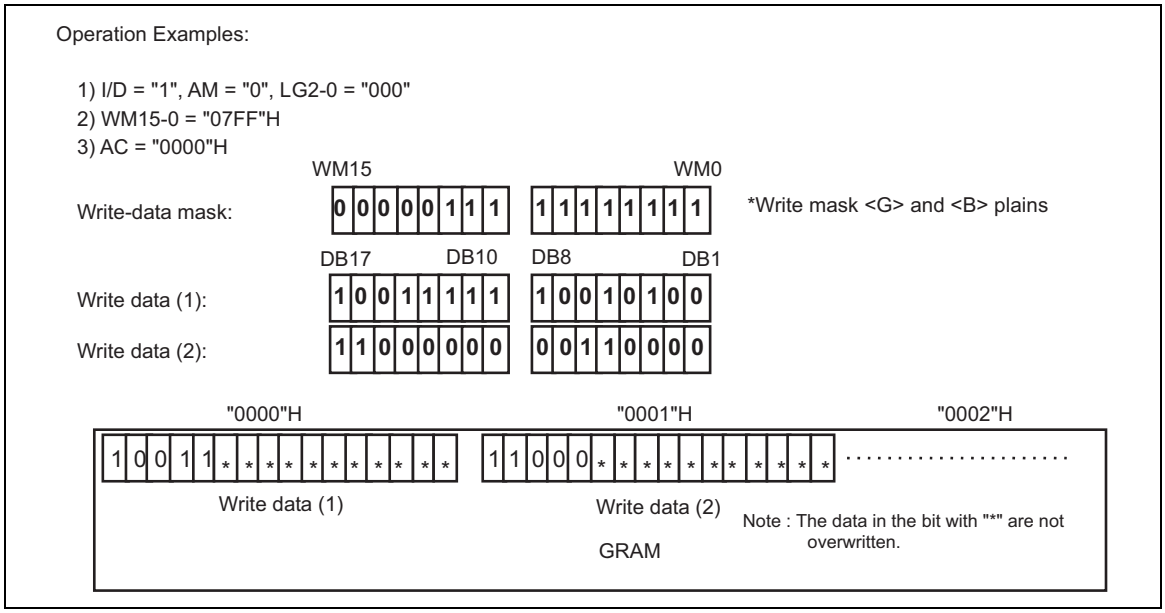

2. Write mode 2: AM = 1, LG2–0 = 000

This mode is used when data are vertically written in high-speed mode. It is also used to initialize the graphics RAM (GRAM), develop font patterns or draw a line vertically. The write-data mask function (WM15–0) is also available in these operations. After writing, the address counter (AC) automatically increments by 256, and automatically jumps to the counter either at the top of the next right row (ID = 1) or the next left row (I/D = 0) according to the setting in the I/D bit, when the address reaches the bottom of GRAM.

1) I/D = "1", AM = "1", LG2-0 = "000"
2) WM15-0 = "07FF"H
3) AC = "0000"H

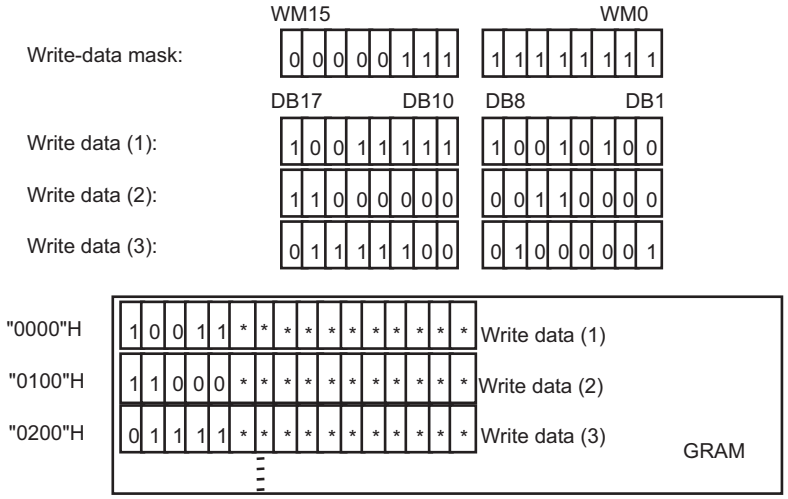

Note 1) The data in the bit with "*" are not overwritten.
Note 2) When data are written to the address "AF00"H, the Address Counter (AC) jumps to "0001"H.

3. Write mode 3: AM = 0, LG2–0 = 110/111

This mode is used when data are horizontally written with comparing the write data and the value set in the compare register (CP15–0). When the result of the comparison satisfies a condition, the write data sent from the microcomputer are written to GRAM. In this operation, the write-data mask function (WM15–0) is available. After writing, the address counter (AC) automatically increments by 1 (I/D = 1) or decrements by 1 (I/D = 0), and jumps to the counter at the opposing edge of the next one-raster-row below after the counter reaches either left or right edge of GRAM.

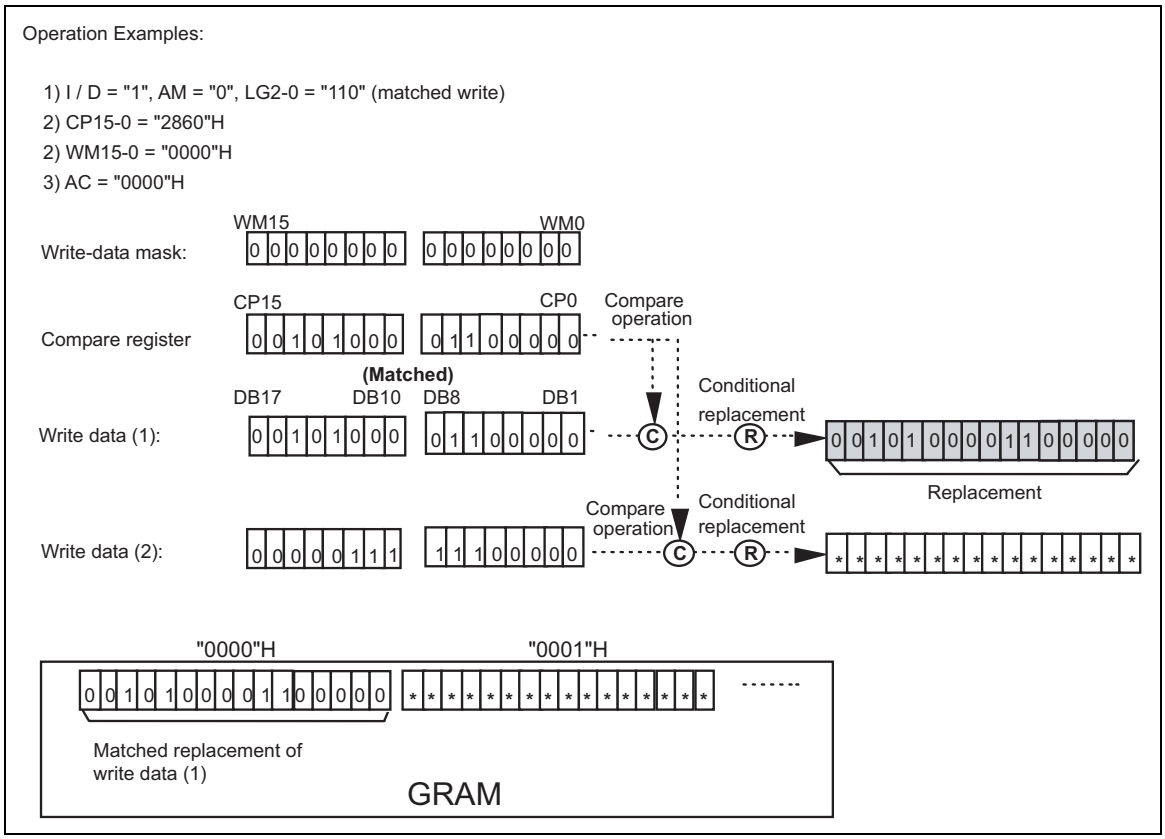

4. Write mode 4: AM = 1, LG2–0 = 110/111

This mode is used when data are vertically written with comparing the write data and the value set in the compare register (CP15–0). When the result of the comparison satisfies a condition, the write data sent from the microcomputer are written to GRAM. In this operation, the write-data mask function (WM15–0) is available. After writing, the address counter (AC) automatically increments by 256, and automatically jumps to the counter either at the top of the next right row (ID = 1) or the next left row (I/D = 0) according to the setting in the I/D bit, when the address reaches the bottom of GRAM.

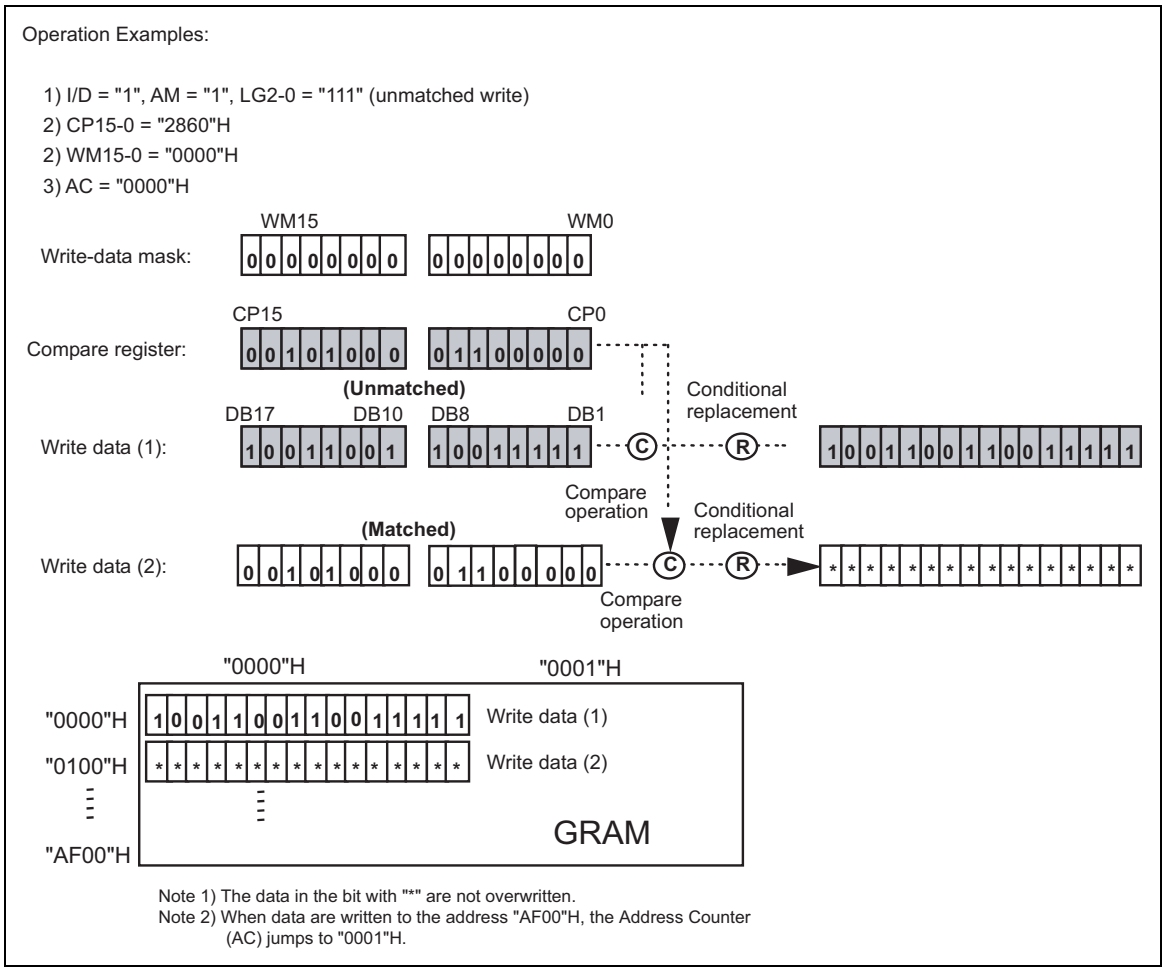

Note 1) The data in the bit with "*" are not overwritten.
Note 2) When data are written to the address "AF00"H, the Address Counter (AC) jumps to "0001"H.

5. Read/Write mode 1: AM = 0, LG2–0 = 001/010/011

This mode is used when data are horizontally written in high-speed with performing logical operation on the GRAM data (base data) and data from the microcomputer. The logical operation is performed on the GRAM read-out data and the data sent from the microcomputer, and the result of the logical operation is written to GRAM. In the read operation, the GRAM data is not read out to the microcomputer but retained temporarily in the read-data latch of the HD66773R. Accordingly, the read operation can be performed using the same pulse width with the write-access pulse (68-system: ENABLE "High" level width, 80-system: ENABLE "Low" level width), but requires the same bus cycle time as the normal read operation. In this operation, the write-data mask function (WM15–0) is available. After writing, the address counter (AC) automatically increments by 1 (I/D = 1) or decrements by 1 (I/D = 0), and jumps to the counter at the opposing edge of the next one-raster-row below after when the counter reaches either left or right edge of GRAM.

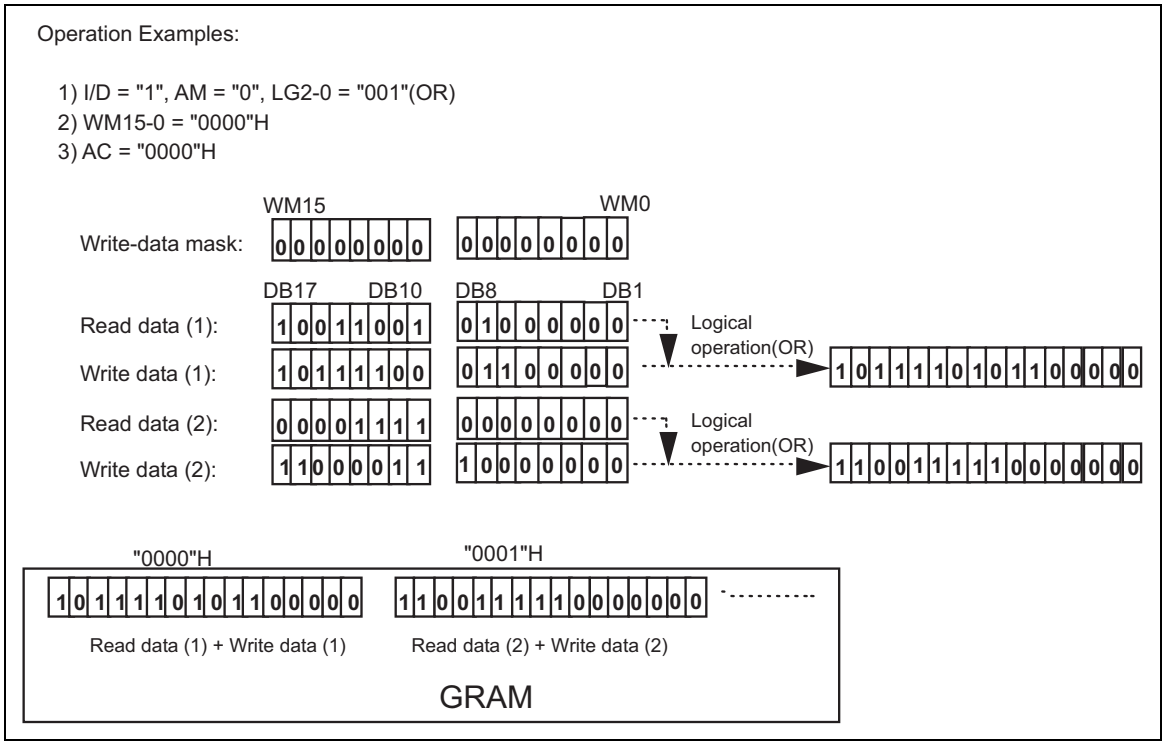

6. Read/Write mode 2: AM = 1, LG2–0 = 110/111

This mode is used when data are vertically written in high-speed with performing logical operation on the GRAM data (base data) and data from the microcomputer. The logical operation is performed on the GRAM read-out data and the data sent from the microcomputer, and the result of the logical operation is written to GRAM. In the read operation, the GRAM data is not read out to the microcomputer but retained temporarily in the read-data latch of the HD66773R. Accordingly, the read operation can be performed using the same pulse width with the write-access pulse (68-system: ENABLE "High" level width, 80-system: ENABLE "Low" level width), but requires the same bus cycle time as the normal read operation. In this operation, the write-data mask function (WM15–0) is available. After writing, the address counter (AC) automatically increments by 256, and automatically jumps to the counter either at the top of the next right row (ID = 1) or the next left row (I/D = 0) according to the setting in the I/D bit, when the address reaches the bottom of GRAM.

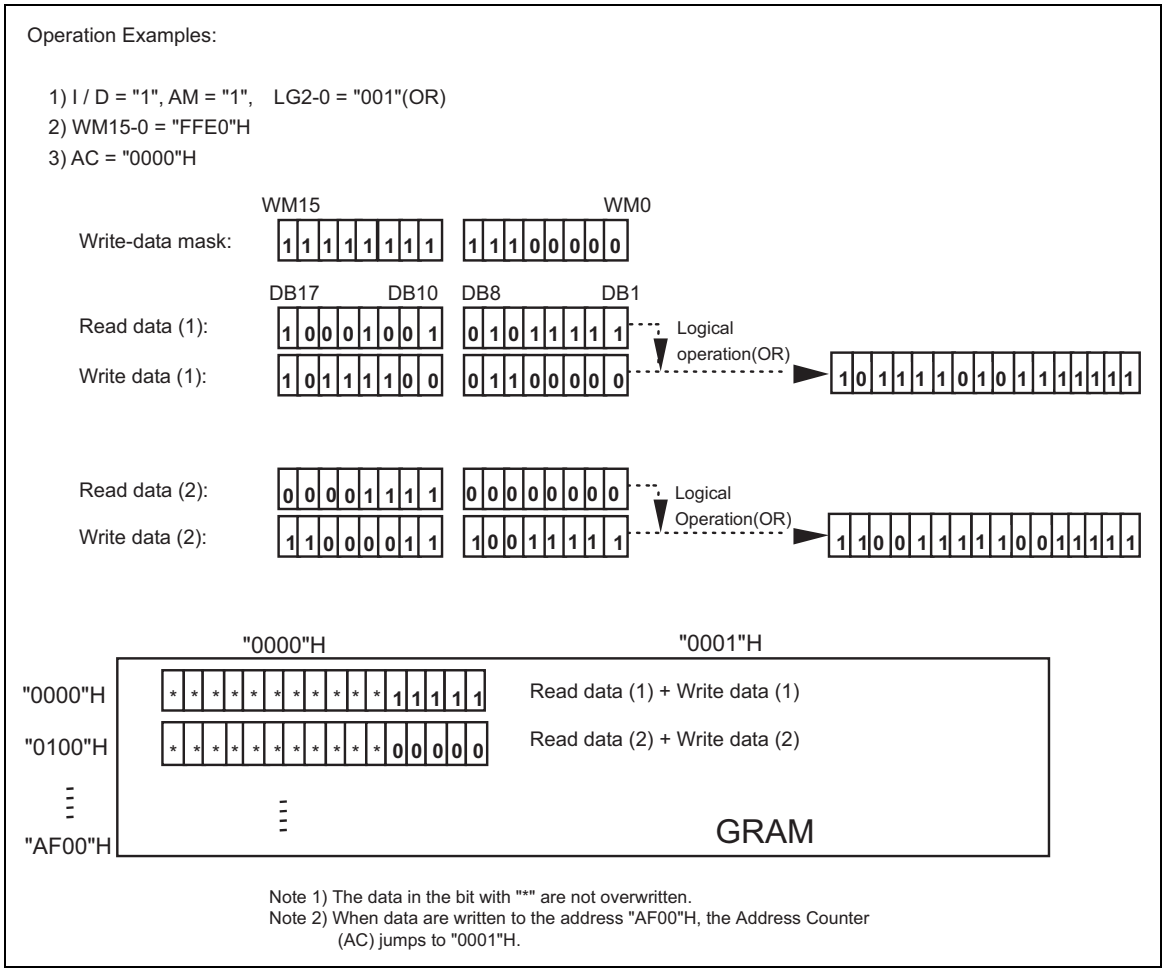

Note 1) The data in the bit with "*" are not overwritten.
Note 2) When data are written to the address "AF00"H, the Address Counter (AC) jumps to "0001"H.

7. Read/Write mode 3: AM = 0, LG2–0 = 100/101

This mode is used when data are horizontally written in high-speed with performing compare operation on the GRAM data (base data) and the value set in the compare register (CP15-0). The compare operation is performed on the GRAM read-out data and the value set in the compare register by word. When the result of the comparison satisfies a condition, the data sent from the microcomputer are written to GRAM. In the read operation, the GRAM data is not read out to the microcomputer but retained temporarily in the read-data latch of the HD66773R. Accordingly, the read operation can be performed using the same pulse width with the write-access pulse (68-system: ENABLE "High" level width, 80-system: ENABLE "Low" level width), but requires the same bus cycle time as the normal read operation. In this operation, the write-data mask function (WM15–0) is available. After writing, the address counter (AC) automatically increments by 1 (I/D = 1) or decrements by 1 (I/D = 0), and jumps to the counter at the opposing edge of the next one-raster-row below after when the counter reaches either left or right edge of GRAM.

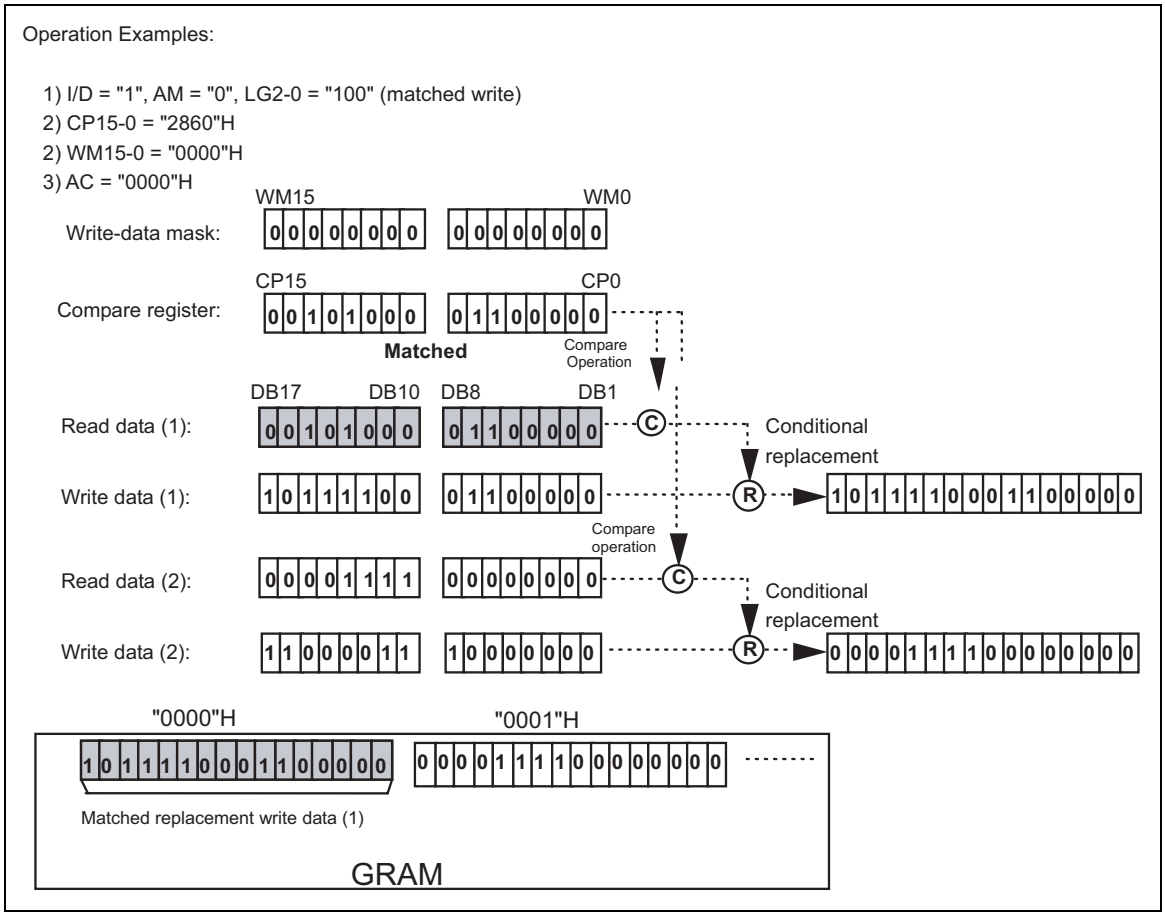

8. Read/Write mode 4: AM = 1, LG2–0 = 100/101

This mode is used when data are vertically written in high-speed with performing compare operation on the GRAM data (base data) and the value set in the compare register (CP15-0). The compare operation is performed on the GRAM read-out data and the value set in the compare register by word. When the result of the comparison satisfies a condition, the data sent from the microcomputer are written to GRAM. In the read operation, the GRAM data is not read out to the microcomputer but retained temporarily in the read-data latch of the HD66773R. Accordingly, the read operation can be performed using the same pulse width with the write-access pulse (68-system: ENABLE "High" level width, 80-system: ENABLE "Low" level width), but requires the same bus cycle time as the normal read operation. In this operation, the write-data mask function (WM15–0) is available. After writing, the address counter (AC) automatically increments by 256, and automatically jumps to the counter either at the top of the next right row (ID = 1) or the next left row (I/D = 0) according to the setting in the I/D bit, when the address reaches the bottom of GRAM.

Operation Examples:

1) I / D = "1", AM = "1", LG2-0 = "101" (unmatched write)
2) CP15-0 = "2860"H
2) WM15-0 = "0000"H
3) AC = "0000"H

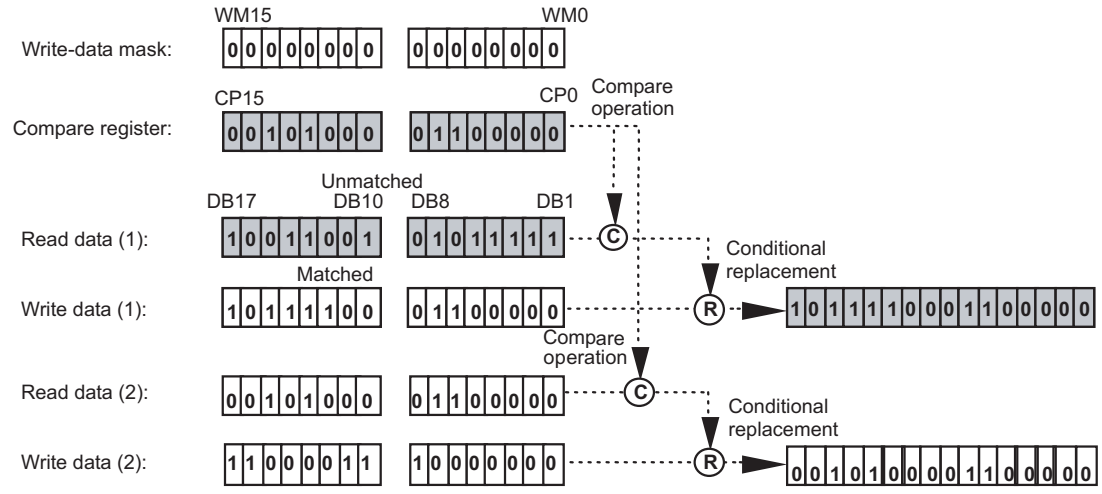

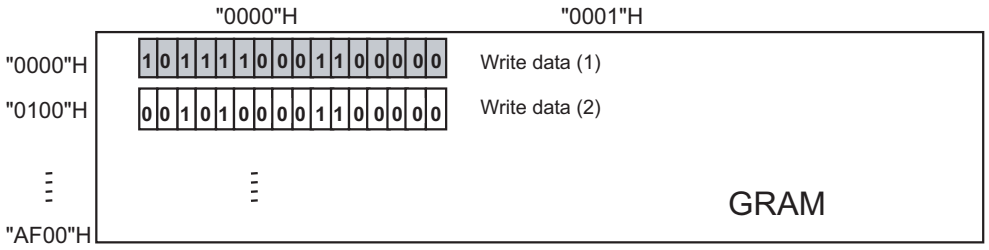

Note 1) The data in the bit with "*" are not overwritten.
Note 2) When data are written to the address "AF00"H, the Address Counter (AC) jumps to "0001"H.

Scan Mode Setting

The shift direction of gate signal is changeable by the combination of SM and GS bit settings. This allows various ways of connecting a liquid crystal panel and the HD66773R.

SM	GS	Scan direction	
0	0	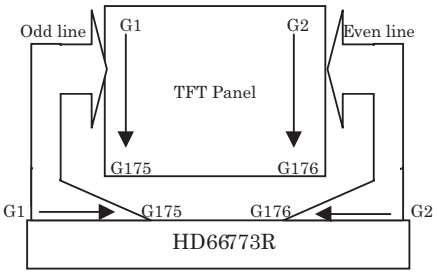	G1→G2→G3 G4→…→G173 G174→G175→G176
0	1	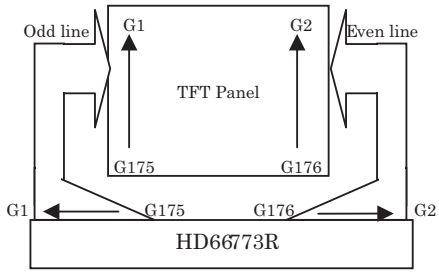	G176→G175→G174 173→…→G4 G3→G2→G1
1	0	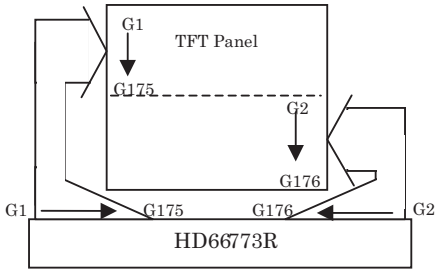	G1→G3 G5→…→G173→G175 G2→G4 G6→…→G174→G176
1	1	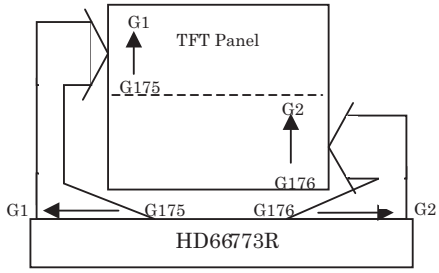	G176→G174 G172→…→G4→G2 G175→G173 G171→…→G3→G1

γ-Correction Function

The HD66773R incorporates γ-correction function to simultaneously display 262,144 colors, by which 8-level grayscale is determined by the gradient-adjustment and fine-adjustment registers. Select either positive or negative polarity of the registers according to the characteristics of a liquid crystal panel.

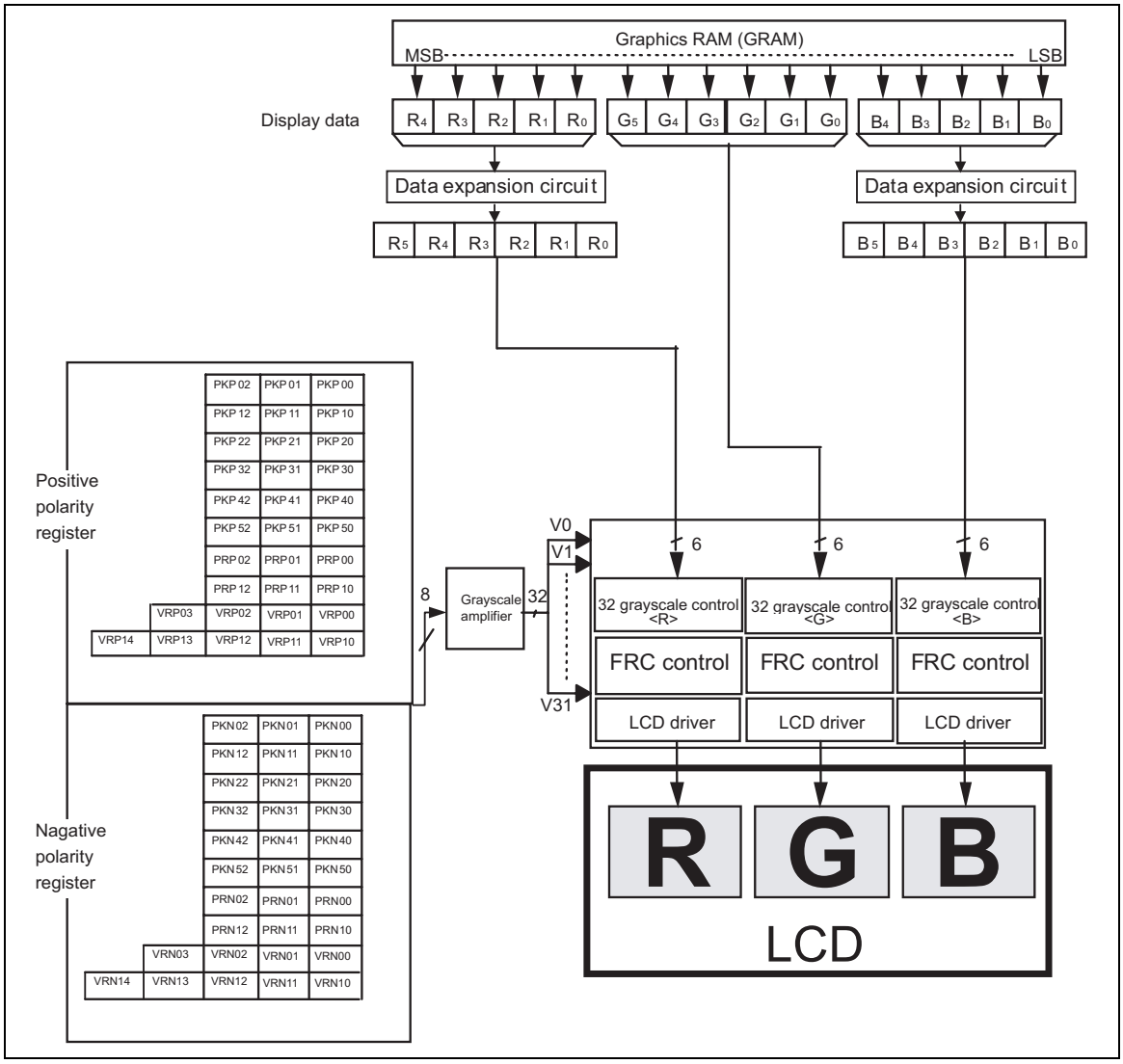

Note 1) 16-bit RAM data is expanded into 18-bit data through data expansion circuit.

Configuration of Grayscale Amplifier

The gradient adjustment and fine adjustment registers determine the eight levels (VIN0-7) of grayscale. The 8 levels are then divided into 32 levels (V0-31) by the ladder resistors placed between each level.

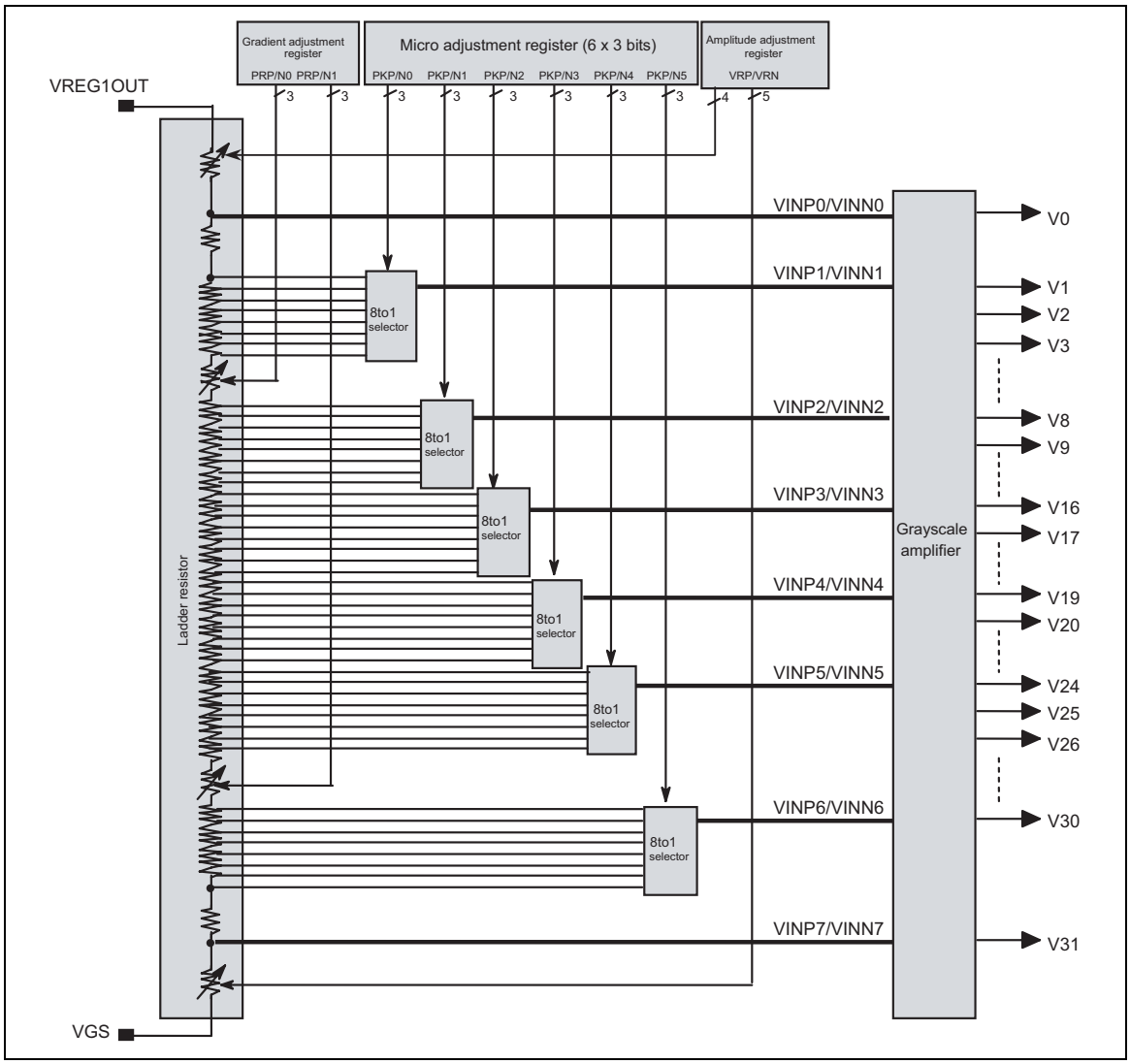

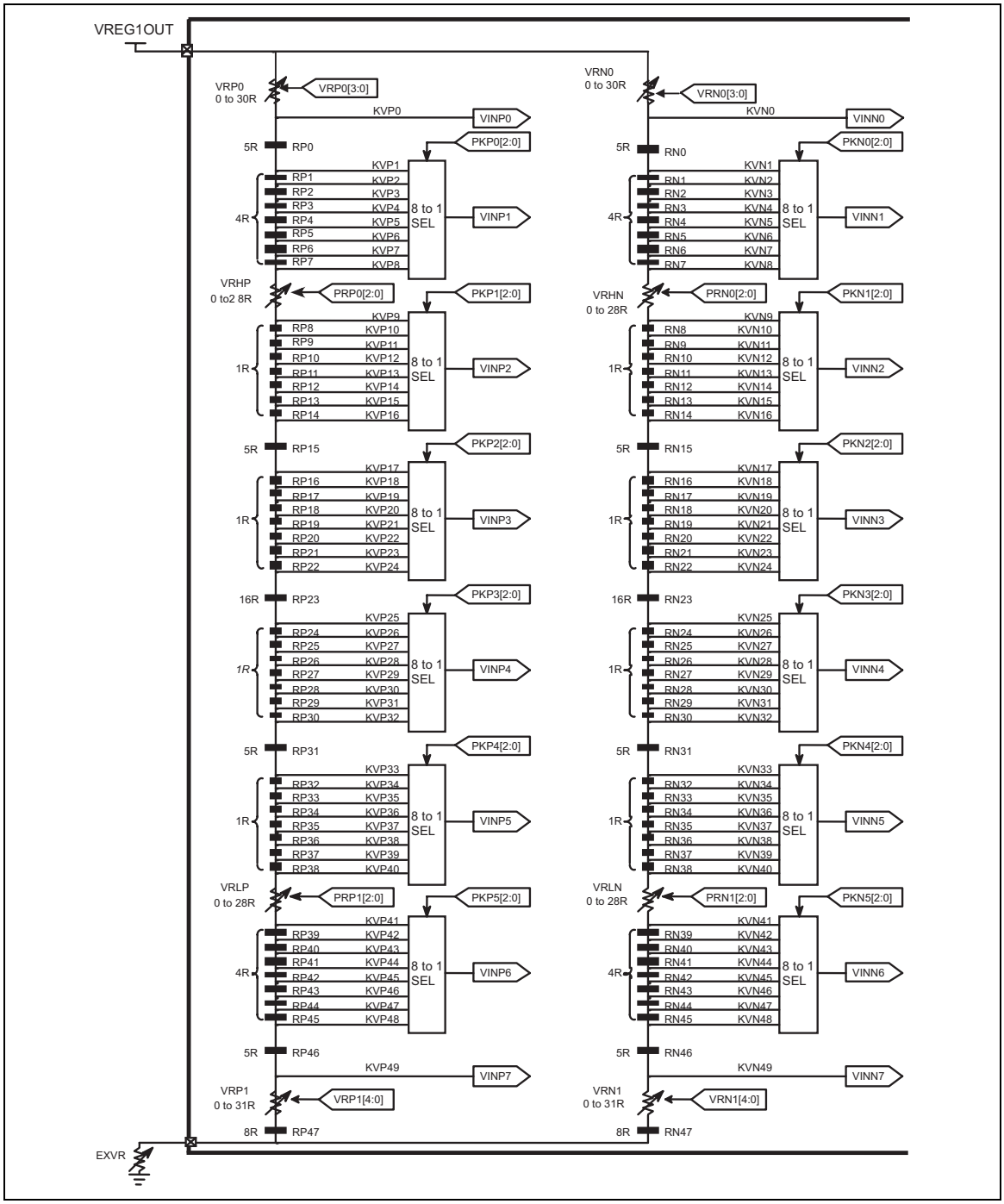

Ladder Resistors and 8-to-1 Selectors

γ-Correction Register

The γ-adjustment register is a group of registers to set an appropriate grayscale voltage for the γ-characteristics of a liquid crystal panel. The register group is categorized into the ones adjusting gradient, amplitude, and fine-tuning in relation to grayscale number and voltage characteristics. Each register can make an independent setting for the positive/negative polarity. The reference value and RGB are common for all registers.

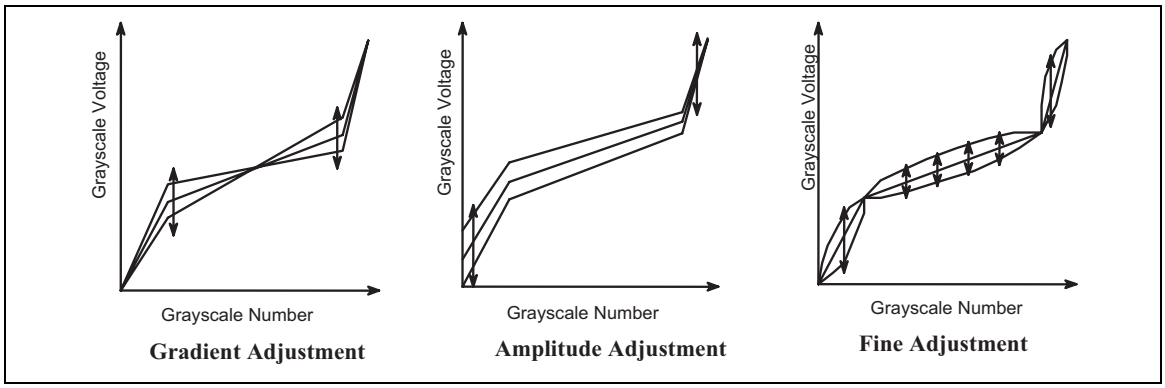

γ-Correction Register

1. Gradient adjustment registers

The gradient adjustment registers are used to adjust the gradient around the middle of the grayscale number and voltage characteristics without changing the dynamic range. To adjust a gradient, the values of the variable resistors (VRHP (N)/VRL (N)) in the middle of the ladder resistor block for grayscale voltage generation are controlled. The registers incorporate separate registers for positive and negative polarities to be compatible with asymmetric drive.

2. Amplitude adjustment registers

The amplitude adjustment registers are used to adjust the amplitude of the grayscale voltage. To adjust the amplitude, the values of the variable resistor (VRP(N)1/0) located at the lower side of the ladder resistor block for grayscale voltage generation are adjusted. The variable resistor located at the upper side of the ladder resistor block is adjusted by the input VDH level or reference resistor. Same with the gradient registers, the registers also incorporate separate registers for positive and negative polarities.

3. Fine adjustment registers

The fine adjustment register is to fine-adjust the grayscale voltage level. To fine-adjust the grayscale voltage level, each level of 8-level reference voltages generated from the ladder registers is controlled by 8-to-1 selector. Same with the other registers, the registers also incorporate separate registers for positive and negative polarities.

γ-Correction Registers

Register Groups	Positive Polarity	Negative Polarity	Description
Gradient adjustment	PRP0 2 to 0	PRN0 2 to 0	Variable resistor VRHP (N)
	PRP1 2 to 0	PRN1 2 to 0	Variable resistor VRLP (N)
Amplitude adjustment	VRP0 3 to 0	VRN0 3 to 0	Variable resistor VRP (N)0
	VRP1 4 to 0	VRN1 4 to 0	Variable resistor VRP (N)1
Fine adjustment	PKP0 2 to 0	PKN0 2 to 0	8-to-1 selector (voltage level of grayscale 1)
	PKP1 2 to 0	PKN1 2 to 0	8-to-1 selector (voltage level of grayscale 8)
	PKP2 2 to 0	PKN2 2 to 0	8-to-1 selector (voltage level of grayscale 20)
	PKP3 2 to 0	PKN3 2 to 0	8-to-1 selector (voltage level of grayscale 43)
	PKP4 2 to 0	PKN4 2 to 0	8-to-1 selector (voltage level of grayscale 55)
	PKP5 2 to 0	PKN5 2 to 0	8-to-1 selector (voltage level of grayscale 62)

Ladder resistors and 8-to-1 selector

Block configuration

The block diagram of page **86** consists of two ladder resistors including variable resistors, and 8-to-1 selectors which select the voltage generated by the ladder resistors to output a reference voltage for the grayscale voltage. The variable resistors and the 8-to-1 selectors are controlled by the γ correction register. Pins that are connected to a variable resistor are provided to compensate the variation among the panels.

Variable resistor

There are two kinds of variable resistors for the gradient adjustment (VRHP(N)/VRLP(N)) and the amplitude adjustment (VRP(N)0/ VRP(N)1). The resistance is determined by the gradient adjustment and amplitude adjustment registers as is shown below.

Gradient adjustment (1)

Register value PRP(N)0[2:0]	Resistance VRHP(N)
000	0R
001	4R
010	8R
011	12R
100	16R
101	20R
110	24R
111	28R

Gradient adjustment (2)

Register value PRP(N)1[2:0]	Resistance VRLP(N)
000	0R
001	4R
010	8R
011	12R
100	16R
101	20R
110	24R
111	28R

Amplitude adjustment (1)

Register value VRP(N)0[3:0]	Resistance VRP(N)0
0000	0R
0001	2R
0010	4R
⋮	⋮
1101	26R
1111	28R
1111	30R

Amplitude adjustment (2)

Register value VRP(N)1[4:0]	Resistance VRP(N)1
00000	0R
00001	1R
00010	2R
⋮	⋮
11101	29R
11110	30R
11111	31R

8-to-1 selector

The 8-to-1 selectors select a voltage level generated by the ladder resistors according to the fine adjustment registers, and output six kinds of reference voltage, VIN1 to VIN 6. The relationship between the fine adjustment register and the selected voltage is as follows.

Fine adjustment registers and selected voltage

The value of Register	Selected Voltage					
PKP(N)[2:0]	VINP(N)1	VINP(N)2	VINP(N)3	VINP(N)4	VINP(N)5	VINP(N)6
000	KVP(N)1	KVP(N)9	KVP(N)17	KVP(N)25	KVP(N)33	KVP(N)41
001	KVP(N)2	KVP(N)10	KVP(N)18	KVP(N)26	KVP(N)34	KVP(N)42
010	KVP(N)3	KVP(N)11	KVP(N)19	KVP(N)27	KVP(N)35	KVP(N)43
011	KVP(N)4	KVP(N)12	KVP(N)20	KVP(N)28	KVP(N)36	KVP(N)44
100	KVP(N)5	KVP(N)13	KVP(N)21	KVP(N)29	KVP(N)37	KVP(N)45
101	KVP(N)6	KVP(N)14	KVP(N)22	KVP(N)30	KVP(N)38	KVP(N)46
110	KVP(N)7	KVP(N)15	KVP(N)23	KVP(N)31	KVP(N)39	KVP(N)47
111	KVP(N)8	KVP(N)16	KVP(N)24	KVP(N)32	KVP(N)40	KVP(N)48

The grayscale levels (V0-V31) are calculated according to the following formulas.

Formulas for calculating voltage (Positive polarity) (1)

Pins	Formula	Micro-adjsting register value	Reference voltage
KVP0	VREG1OUT-△V*VRP0/SUMRP	-	VINP0
KVP1	VREG1OUT-△V*(VRP0+5R)/SUMRP	PKP02-00 = "000"	VINP1
KVP2	VREG1OUT-△V*(VRP0+9R)/SUMRP	PKP02-00 = "001"	
KVP3	VREG1OUT-△V*(VRP0+13R)/SUMRP	PKP02-00 = "010"	
KVP4	VREG1OUT-△V*(VRP0+17R)/SUMRP	PKP02-00 = "011"	
KVP5	VREG1OUT-△V*(VRP0+21R)/SUMRP	PKP02-00 = "100"	
KVP6	VREG1OUT-△V*(VRP0+25R)/SUMRP	PKP02-00 = "101"	
KVP7	VREG1OUT-△V*(VRP0+29R)/SUMRP	PKP02-00 = "110"	
KVP8	VREG1OUT-△V*(VRP0+33R)/SUMRP	PKP02-00 = "111"	
KVP9	VREG1OUT-△V*(VRP0+33R+VRHP)/SUMRP	PKP12-10 = "000"	VINP2
KVP10	VREG1OUT-△V*(VRP0+34R+VRHP)/SUMRP	PKP12-10 = "001"	
KVP11	VREG1OUT-△V*(VRP0+35R+VRHP)/SUMRP	PKP12-10 = "010"	
KVP12	VREG1OUT-△V*(VRP0+36R+VRHP)/SUMRP	PKP12-10 = "011"	
KVP13	VREG1OUT-△V*(VRP0+37R+VRHP)/SUMRP	PKP12-10 = "100"	
KVP14	VREG1OUT-△V*(VRP0+38R+VRHP)/SUMRP	PKP12-10 = "101"	
KVP15	VREG1OUT-△V*(VRP0+39R+VRHP)/SUMRP	PKP12-10 = "110"	
KVP16	VREG1OUT-△V*(VRP0+40R+VRHP)/SUMRP	PKP12-10 = "111"	
KVP17	VREG1OUT-△V*(VRP0+45R+VRHP)/SUMRP	PKP22-20 = "000"	VINP3
KVP18	VREG1OUT-△V*(VRP0+46R+VRHP)/SUMRP	PKP22-20 = "001"	
KVP19	VREG1OUT-△V*(VRP0+47R+VRHP)/SUMRP	PKP22-20 = "010"	
KVP20	VREG1OUT-△V*(VRP0+48R+VRHP)/SUMRP	PKP22-20 = "011"	
KVP21	VREG1OUT-△V*(VRP0+49R+VRHP)/SUMRP	PKP22-20 = "100"	
KVP22	VREG1OUT-△V*(VRP0+50R+VRHP)/SUMRP	PKP22-20 = "101"	
KVP23	VREG1OUT-△V*(VRP0+51R+VRHP)/SUMRP	PKP22-20 = "110"	
KVP24	VREG1OUT-△V*(VRP0+52R+VRHP)/SUMRP	PKP22-20 = "111"	
KVP25	VREG1OUT-△V*(VRP0+68R+VRHP)/SUMRP	PKP32-30 = "000"	VINP4
KVP26	VREG1OUT-△V*(VRP0+69R+VRHP)/SUMRP	PKP32-30 = "001"	
KVP27	VREG1OUT-△V*(VRP0+70R+VRHP)/SUMRP	PKP32-30 = "010"	
KVP28	VREG1OUT-△V*(VRP0+71R+VRHP)/SUMRP	PKP32-30 = "011"	
KVP29	VREG1OUT-△V*(VRP0+72R+VRHP)/SUMRP	PKP32-30 = "100"	
KVP30	VREG1OUT-△V*(VRP0+73R+VRHP)/SUMRP	PKP32-30 = "101"	
KVP31	VREG1OUT-△V*(VRP0+74R+VRHP)/SUMRP	PKP32-30 = "110"	
KVP32	VREG1OUT-△V*(VRP0+75R+VRHP)/SUMRP	PKP32-30 = "111"	
KVP33	VREG1OUT-△V*(VRP0+80R+VRHP)/SUMRP	PKP42-00 = "000"	VINP5
KVP34	VREG1OUT-△V*(VRP0+81R+VRHP)/SUMRP	PKP42-40 = "001"	
KVP35	VREG1OUT-△V*(VRP0+82R+VRHP)/SUMRP	PKP42-40 = "010"	
KVP36	VREG1OUT-△V*(VRP0+83R+VRHP)/SUMRP	PKP42-40 = "011"	
KVP37	VREG1OUT-△V*(VRP0+84R+VRHP)/SUMRP	PKP42-40 = "100"	
KVP38	VREG1OUT-△V*(VRP0+85R+VRHP)/SUMRP	PKP42-40 = "101"	
KVP39	VREG1OUT-△V*(VRP0+86R+VRHP)/SUMRP	PKP42-40 = "110"	
KVP40	VREG1OUT-△V*(VRP0+87R+VRHP)/SUMRP	PKP42-40 = "111"	
KVP41	VREG1OUT-△V*(VRP0+87R+VRHP+VRLP)/SUMRP	PKP52-50 = "000"	VINP6
KVP42	VREG1OUT-△V*(VRP0+91R+VRHP+VRLP)/SUMRP	PKP52-50 = "001"	
KVP43	VREG1OUT-△V*(VRP0+95R+VRHP+VRLP)/SUMRP	PKP52-50 = "010"	
KVP44	VREG1OUT-△V*(VRP0+99R+VRHP+VRLP)/SUMRP	PKP52-50 = "011"	
KVP45	VREG1OUT-△V*(VRP0+103R+VRHP+VRLP)/SUMRP	PKP52-50 = "100"	
KVP46	VREG1OUT-△V*(VRP0+107R+VRHP+VRLP)/SUMRP	PKP52-50 = "101"	
KVP47	VREG1OUT-△V*(VRP0+111R+VRHP+VRLP)/SUMRP	PKP52-50 = "110"	
KVP48	VREG1OUT-△V*(VRP0+115R+VRHP+VRLP)/SUMRP	PKP52-50 = "111"	
KVP49	VREG1OUT-△V*(VRP0+120R+VRHP+VRLP)/SUMRP	-	VINP7

SUMRP: Total of the positive-polarity ladder resistors = 128 R + VRHP + VRLP + VRP0 + VRP1

SUMRN: Total of the negative-polarity ladder resistors= 128 R + VRHN + VRLN + VRN0 + VRN1

△V: Voltage difference between VREG1OUT - VGS

Formulas for calculating voltage (Positive polarity) (2)

grayscale voltage	Formula
V0	VINP0
V1	V3D+(VINP1-V3D)*(8/24)
V2	V4+(V3D-V4)*(16/24)
V3	V4+(V3D-V4)*(8/24)
V4	VINP2
V5	V10+(V4-V10)*(20/24)
V6	V10+(V4-V10)*(16/24)
V7	V10+(V4-V10)*(12/24)
V8	V10+(V4-V10)*(8/24)
V9	V10+(V4-V10)*(4/24)
V10	VINP3
V11	V21+(V10-V21)*(21/24)
V12	V21+(V10-V21)*(19/24)
V13	V21+(V10-V21)*(17/24)
V14	V21+(V10-V21)*(15/24)
V15	V21+(V10-V21)*(13/24)
V16	V21+(V10-V21)*(11/24)
V17	V21+(V10-V21)*(9/24)
V18	V21+(V10-V21)*(7/24)
V19	V21+(V10-V21)*(5/24)
V20	V21+(V10-V21)*(3/24)
V21	VINP4
V22	V27+(V21-V27)*(20/24)
V23	V27+(V21-V27)*(16/24)
V24	V27+(V21-V27)*(12/24)
V25	V27+(V21-V27)*(8/24)
V26	V27+(V21-V27)*(4/24)
V27	VINP5
V28	VINP6+(V27-VINP6)*(780/960)
V29	VINP6+(V27-VINP6)*(600/960)
V30	VINP6+(V27-VINP6)*(280/960)
V31	VINP7

V3D: V3D = V4+(VINP1-V4)*(540/960)

Formulas for calculating voltage (Negative polarity) (1)

Pins	Formula	Micro-adjsting register value	Reference voltage
KVN0	VREG1OUT- △V*VRN0/SUMRN	-	VINN0
KVN1	VREG1OUT- △V*(VRN0+5R)/SUMRN	PKN02-00 = "000"	VINN1
KVN2	VREG1OUT- △V*(VRN0+9R)/SUMRN	PKN02-00 = "001"	
KVN3	VREG1OUT- △V*(VRN0+13R)/SUMRN	PKN02-00 = "010"	
KVN4	VREG1OUT- △V*(VRN0+17R)/SUMRN	PKN02-00 = "011"	
KVN5	VREG1OUT- △V*(VRN0+21R)/SUMRN	PKN02-00 = "100"	
KVN6	VREG1OUT- △V*(VRN0+25R)/SUMRN	PKN02-00 = "101"	
KVN7	VREG1OUT- △V*(VRN0+29R)/SUMRN	PKN02-00 = "110"	
KVN8	VREG1OUT- △V*(VRN0+33R)/SUMRN	PKN02-00 = "111"	
KVN9	VREG1OUT- △V*(VRN0+33R+VRHN)/SUMRN	PKN12-10 = "000"	VINN2
KVN10	VREG1OUT- △V*(VRN0+34R+VRHN)/SUMRN	PKN12-10 = "001"	
KVN11	VREG1OUT- △V*(VRN0+35R+VRHN)/SUMRN	PKN12-10 = "010"	
KVN12	VREG1OUT- △V*(VRN0+36R+VRHN)/SUMRN	PKN12-10 = "011"	
KVN13	VREG1OUT- △V*(VRN0+37R+VRHN)/SUMRN	PKN12-10 = "100"	
KVN14	VREG1OUT- △V*(VRN0+38R+VRHN)/SUMRN	PKN12-10 = "101"	
KVN15	VREG1OUT- △V*(VRN0+39R+VRHN)/SUMRN	PKN12-10 = "110"	
KVN16	VREG1OUT- △V*(VRN0+40R+VRHN)/SUMRN	PKN12-10 = "111"	
KVN17	VREG1OUT- △V*(VRN0+45R+VRHN)/SUMRN	PKN22-20 = "000"	VINN3
KVN18	VREG1OUT- △V*(VRN0+46R+VRHN)/SUMRN	PKN22-20 = "001"	
KVN19	VREG1OUT- △V*(VRN0+47R+VRHN)/SUMRN	PKN22-20 = "010"	
KVN20	VREG1OUT- △V*(VRN0+48R+VRHN)/SUMRN	PKN22-20 = "011"	
KVN21	VREG1OUT- △V*(VRN0+49R+VRHN)/SUMRN	PKN22-20 = "100"	
KVN22	VREG1OUT- △V*(VRN0+50R+VRHN)/SUMRN	PKN22-20 = "101"	
KVN23	VREG1OUT- △V*(VRN0+51R+VRHN)/SUMRN	PKN22-20 = "110"	
KVN24	VREG1OUT- △V*(VRN0+52R+VRHN)/SUMRN	PKN22-20 = "111"	
KVN25	VREG1OUT- △V*(VRN0+68R+VRHN)/SUMRN	PKN32-30 = "000"	VINN4
KVN26	VREG1OUT- △V*(VRN0+69R+VRHN)/SUMRN	PKN32-30 = "001"	
KVN27	VREG1OUT- △V*(VRN0+70R+VRHN)/SUMRN	PKN32-30 = "010"	
KVN28	VREG1OUT- △V*(VRN0+71R+VRHN)/SUMRN	PKN32-30 = "011"	
KVN29	VREG1OUT- △V*(VRN0+72R+VRHN)/SUMRN	PKN32-30 = "100"	
KVN30	VREG1OUT- △V*(VRN0+73R+VRHN)/SUMRN	PKN32-30 = "101"	
KVN31	VREG1OUT- △V*(VRN0+74R+VRHN)/SUMRN	PKN32-30 = "110"	
KVN32	VREG1OUT- △V*(VRN0+75R+VRHN)/SUMRN	PKN32-30 = "111"	
KVN33	VREG1OUT- △V*(VRN0+80R+VRHN)/SUMRN	PKN42-00 = "000"	VINN5
KVN34	VREG1OUT- △V*(VRN0+81R+VRHN)/SUMRN	PKN42-00 = "001"	
KVN35	VREG1OUT- △V*(VRN0+82R+VRHN)/SUMRN	PKN42-00 = "010"	
KVN36	VREG1OUT- △V*(VRN0+83R+VRHN)/SUMRN	PKN42-00 = "011"	
KVN37	VREG1OUT- △V*(VRN0+84R+VRHN)/SUMRN	PKN42-00 = "100"	
KVN38	VREG1OUT- △V*(VRN0+85R+VRHN)/SUMRN	PKN42-00 = "101"	
KVN39	VREG1OUT- △V*(VRN0+86R+VRHN)/SUMRN	PKN42-00 = "110"	
KVN40	VREG1OUT- △V*(VRN0+87R+VRHN)/SUMRN	PKN42-00 = "111"	
KVN41	VREG1OUT- △V*(VRN0+87R+VRHN+VRLN)/SUMRN	PKN52-50 = "000"	VINN6
KVN42	VREG1OUT- △V*(VRN0+91R+VRHN+VRLN)/SUMRN	PKN52-50 = "001"	
KVN43	VREG1OUT- △V*(VRN0+95R+VRHN+VRLN)/SUMRN	PKN52-50 = "010"	
KVN44	VREG1OUT- △V*(VRN0+99R+VRHN+VRLN)/SUMRN	PKN52-50 = "011"	
KVN45	VREG1OUT- △V*(VRN0+103R+VRHN+VRLN)/SUMRN	PKN52-50 = "100"	
KVN46	VREG1OUT- △V*(VRN0+107R+VRHN+VRLN)/SUMRN	PKN52-50 = "101"	
KVN47	VREG1OUT- △V*(VRN0+111R+VRHN+VRLN)/SUMRN	PKN52-50 = "110"	
KVN48	VREG1OUT- △V*(VRN0+115R+VRHN+VRLN)/SUMRN	PKN52-50 = "111"	
KVN49	VREG1OUT- △V*(VRN0+120R+VRHN+VRLN)/SUMRN	-	VINN7

SUMRP: Total of the positive-polarity ladder resistors = 128 R + VRHP + VRLP + VRP0 + VRP1

SUMRN: Total of the negative-polarity ladder resistors= 128 R + VRHN + VRLN + VRN0 + VRN1

Δ V: Voltage difference between VREG1OUT - VGS

Formulas for calculating voltage (Negative polarity) (2)

grayscale voltage	Formula
V0	VINN0
V1	V3D+(VINN1-V3D)*(8/24)
V2	V4+(V3D-V4)*(16/24)
V3	V4+(V3D-V4)*(8/24)
V4	VINN2
V5	V10+(V4-V10)*(20/24)
V6	V10+(V4-V10)*(16/24)
V7	V10+(V4-V10)*(12/24)
V8	V10+(V4-V10)*(8/24)
V9	V10+(V4-V10)*(4/24)
V10	VINN3
V11	V21+(V10-V21)*(21/24)
V12	V21+(V10-V21)*(19/24)
V13	V21+(V10-V21)*(17/24)
V14	V21+(V10-V21)*(15/24)
V15	V21+(V10-V21)*(13/24)
V16	V21+(V10-V21)*(11/24)
V17	V21+(V10-V21)*(9/24)
V18	V21+(V10-V21)*(7/24)
V19	V21+(V10-V21)*(5/24)
V20	V21+(V10-V21)*(3/24)
V21	VINN4
V22	V27+(V21-V27)*(20/24)
V23	V27+(V21-V27)*(16/24)
V24	V27+(V21-V27)*(12/24)
V25	V27+(V21-V27)*(8/24)
V26	V27+(V21-V27)*(4/24)
V27	VINN5
V28	VINN6+(V27-VINN6)*(780/960)
V29	VINN6+(V27-VINN6)*(600/960)
V30	VINN6+(V27-VINN6)*(280/960)
V31	VINN7

V3D: V3D = V4+(VINN1-V4)*(540/960)

Relationship between RAM data and output level

The relationship between the RAM data and the source output level is as follows.

Relationship between RAM data and source output level

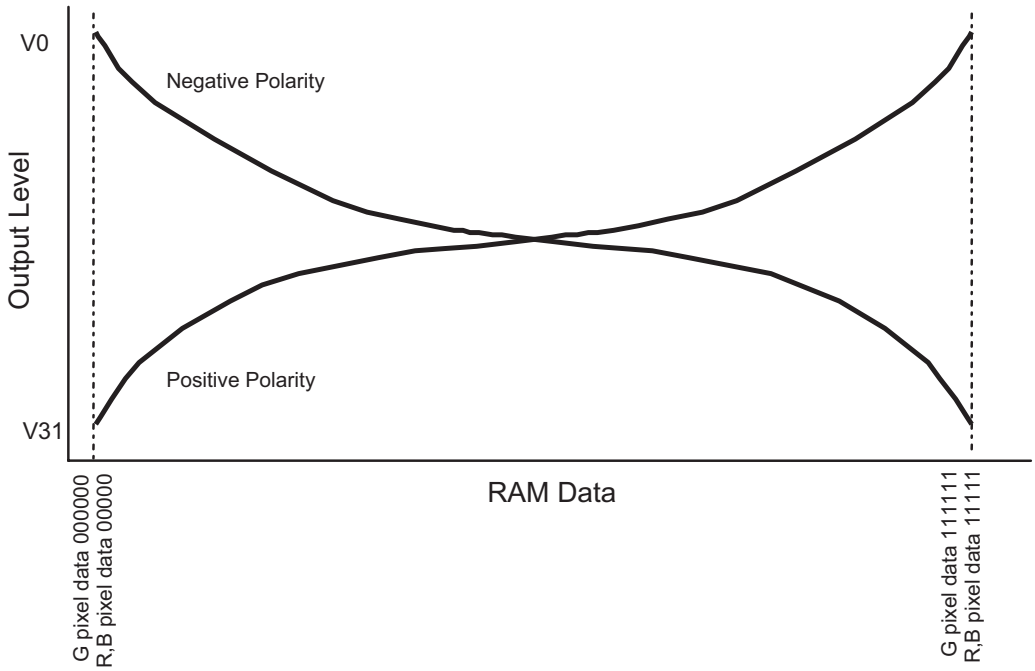

Relationship between Vcom and source output level

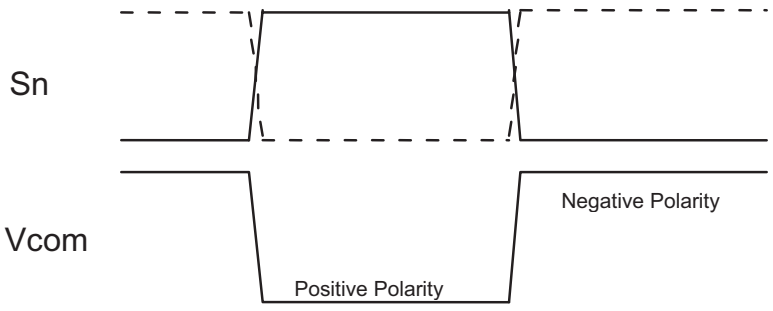

8-color Display Mode

The HD66773R incorporates 8-color display mode. The available grayscale levels are V0 and V31, and the voltages for the other levels (V1-V30) are halted to reduce power consumption.

The γ-fine-adjustment registers, PKP0-PKP5 and PKN0-PKN5 are not available in the 8-color display mode. Since the power supply for the levels V1-V30 are halted, R and B data in GRAM should be set to either “00000” or “11111” and G data in GRAM to either “000000” or “111111” before setting this mode so that V0 or V31 is selected.

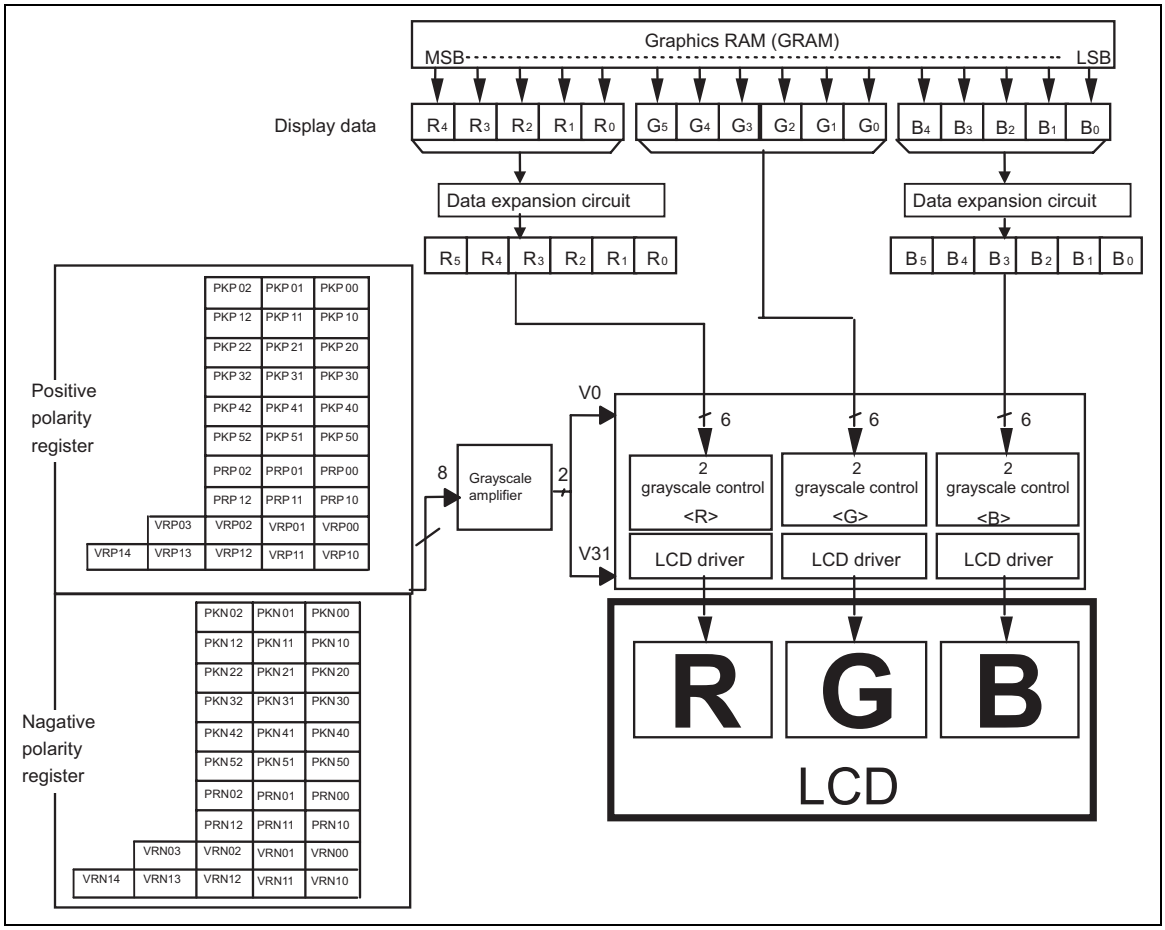

To switch between the 262, 144-color mode and the 8-color mode, make settings according to the following sequences.

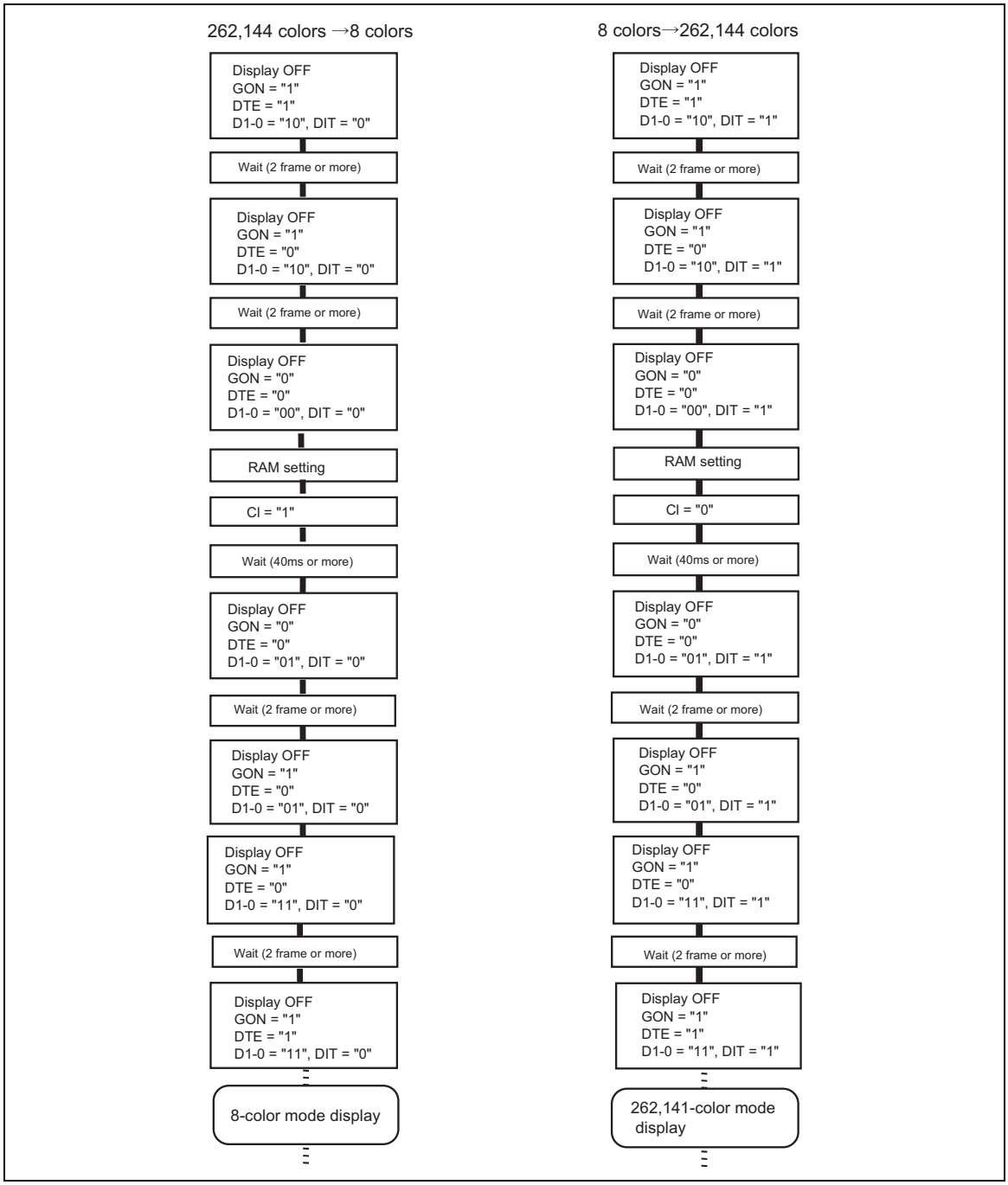

Instruction Setting Flow

Make the setting for each instruction according to the following sequence.

Display ON/OFF

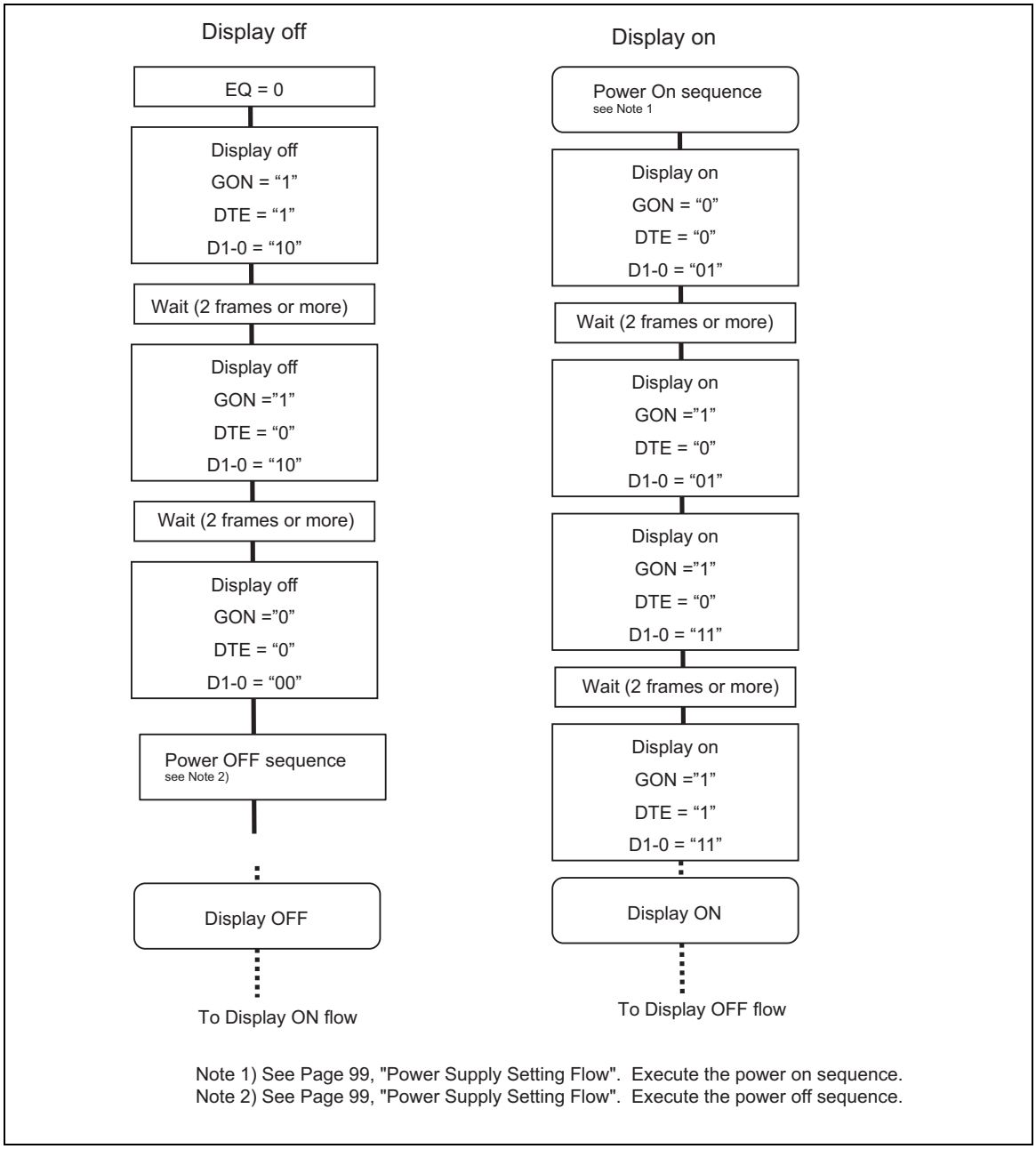

Note 1) See Page 99, "Power Supply Setting Flow". Execute the power on sequence.
Note 2) See Page 99, "Power Supply Setting Flow". Execute the power off sequence.

Standby and Sleep

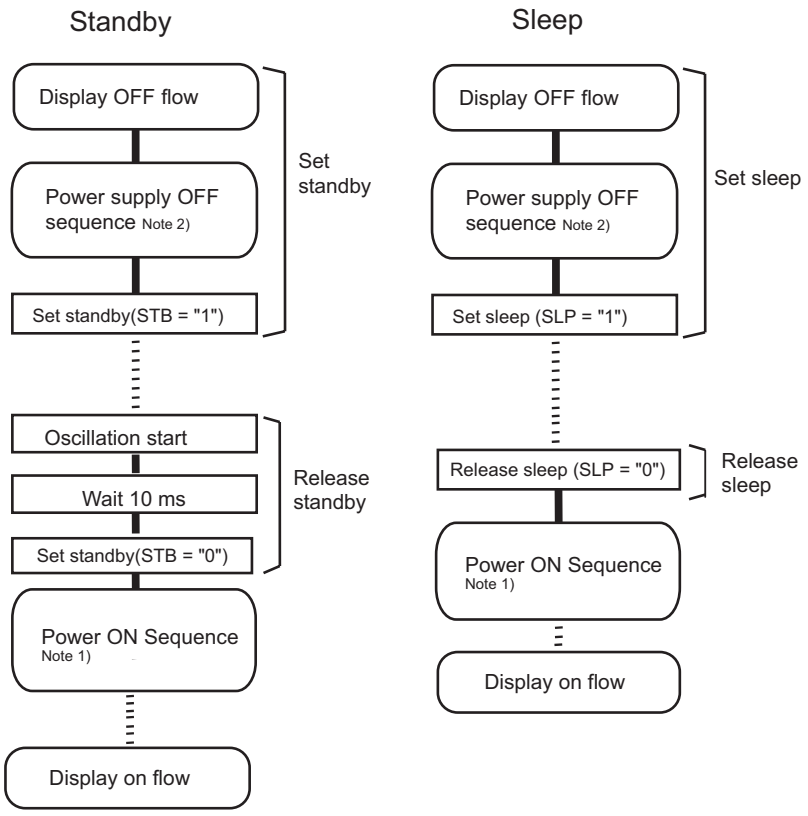

Note 1) See Page 99, "Power Supply Setting Flow". Execute the power on sequence.
Note 2) See Page 99, "Power Supply Setting Flow". Execute the power off sequence.

Power Supply Setting Flow

When turning on the power supply, follow the sequence below.

The stabilization time for the oscillation circuits, step-up circuits, and operation amplifiers may vary depending on the external resistors and capacitors.

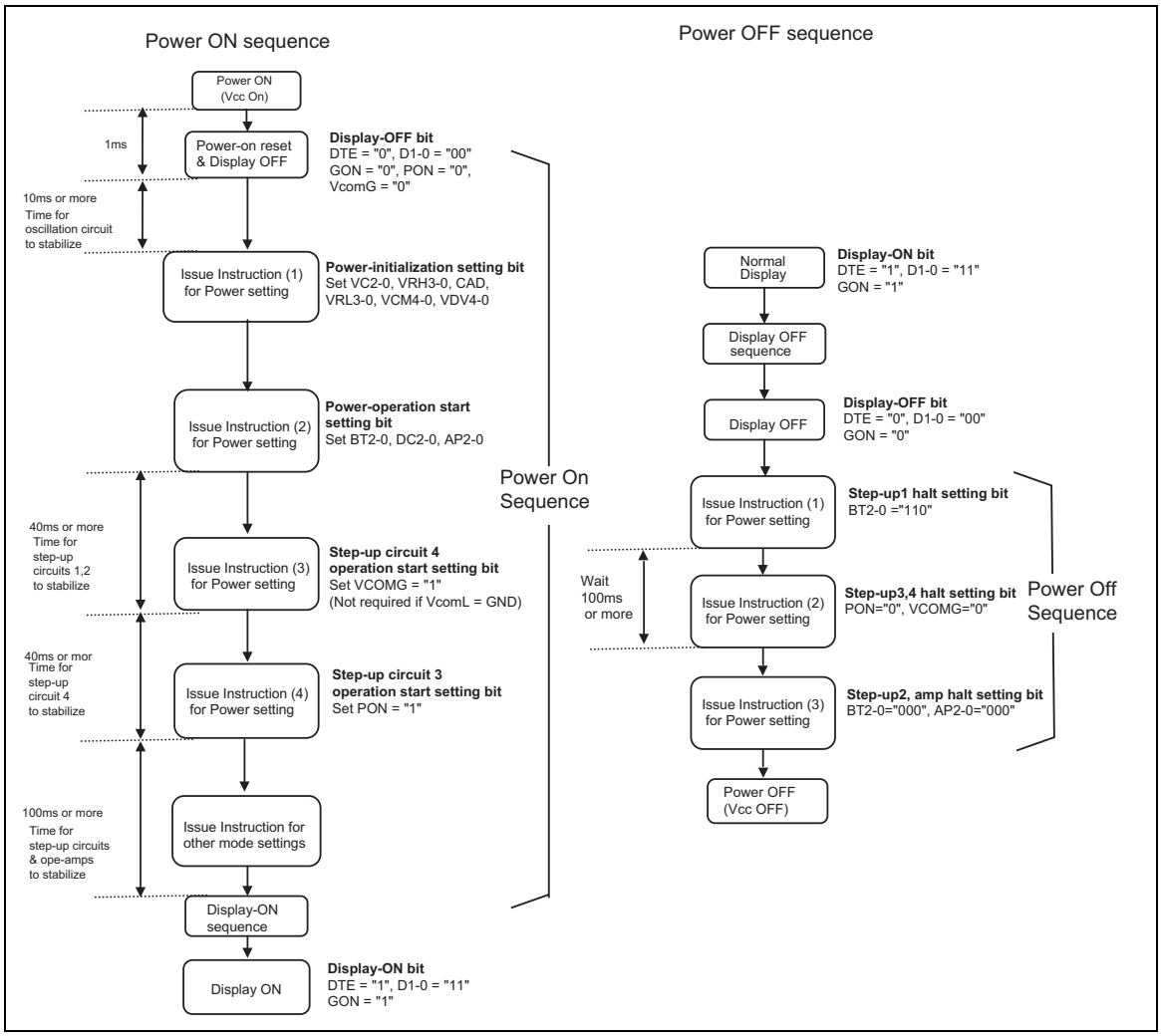

Oscillation Circuit

1) External clock mode

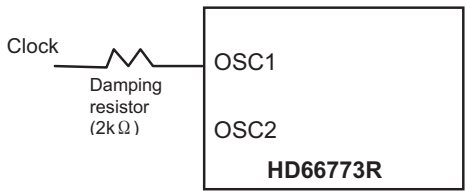

2) External resistor oscillation mode

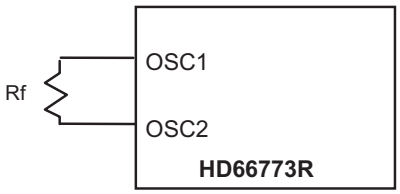

Place the Rf resistor as close as possible to the OSC1, OSC2 pins

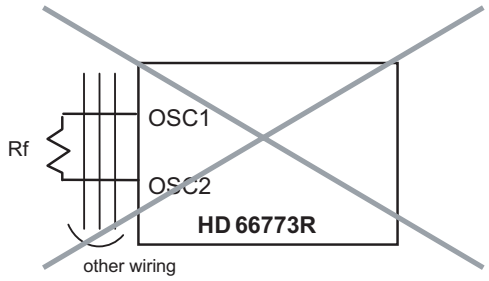

Place the Rf oscillation resistor as close as possible to the OSC1, OSC2 pins.
Do not arrange other wiring beneath OSC1-OSC2 wiring to avoid effects from coupling.

n-raster-row Inversion AC Drive

The HD66773R, in addition to LCD inversion AC drive by frame, supports n-raster-row inversion AC drive where alternation occurs by n raster-rows, where n takes a number between 1 to 64. The n-raster-row inversion AC drive allows overcoming the problems related to display quality.

In determining n (the value set in the NW bit +1), the number of raster-rows by which alternation occurs, check the display quality on the actual liquid crystal panel. Setting a small number of raster-rows will raise the AC frequency of the liquid crystal and increase the charge/discharge current on the liquid crystal cells.

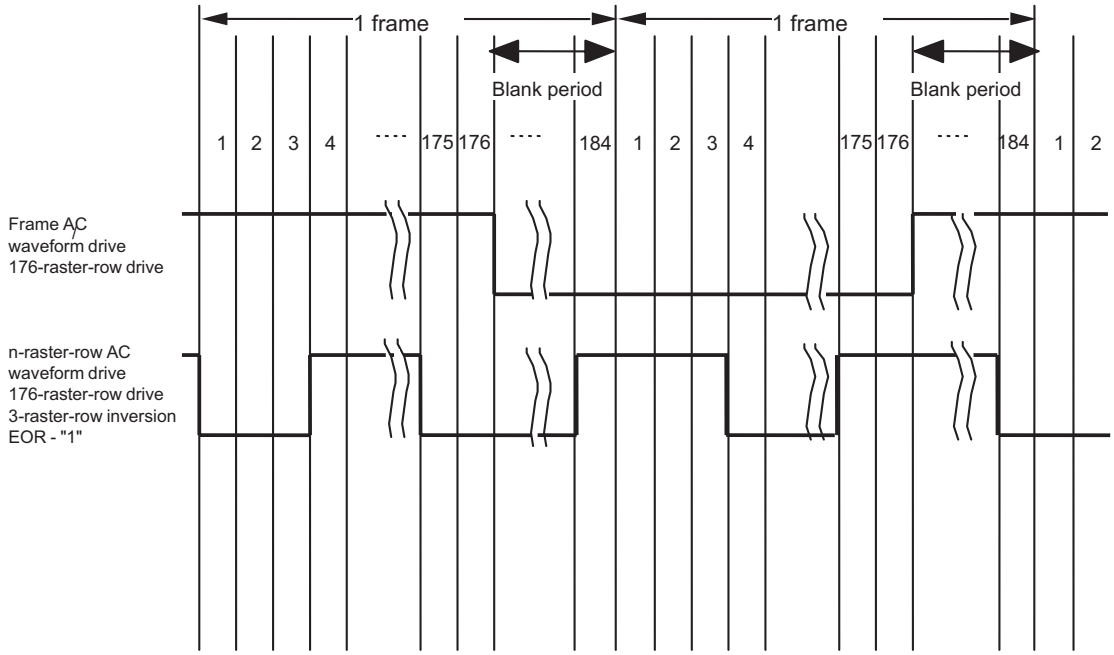

Make sure that EOR = "1" in n-raster-row drive to prevent the direct bias on liquid crystal.

Interlaced Drive

The HD66773R supports interlaced drive, which divide one frame into n fields and then drive to prevent flickers.

To determine the number of fields (n: value set in the FLD bits), check the display quality on the actual liquid crystal panel. The following table shows the gate selection for each number of fields, 1 to 3. The figure illustrates the output waveforms of the 3-field interlaced drive.

Gate selection

GS = 0

FLD1-0		**01**		**11**	
Gate	**Field**	**-**	**1**	**2**	**3**
G1		O	O		
G2		O		O	
G3		O			O
G4		O	O		
G5		O		O	
G6		O			O
G7		O	O		
G8		O		O	
G9		O			O
•		•	•	•	•
•		•	•	•	•
•		•	•	•	•
G173		O		O	
G174		O			O
G175		O	O		
G176		O		O	

GS = 1

FLD1-0		**01**		**11**	
Gate	**Field**	**-**	**1**	**2**	**3**
G176		O	O		
G175		O		O	
G174		O			O
G173		O	O		
G172		O		O	
G171		O			O
G170		O	O		
G169		O		O	
G168		O			O
•		•	•	•	•
•		•	•	•	•
•		•	•	•	•
G4		O		O	
G3		O			O
G2		O	O		
G1		O		O	

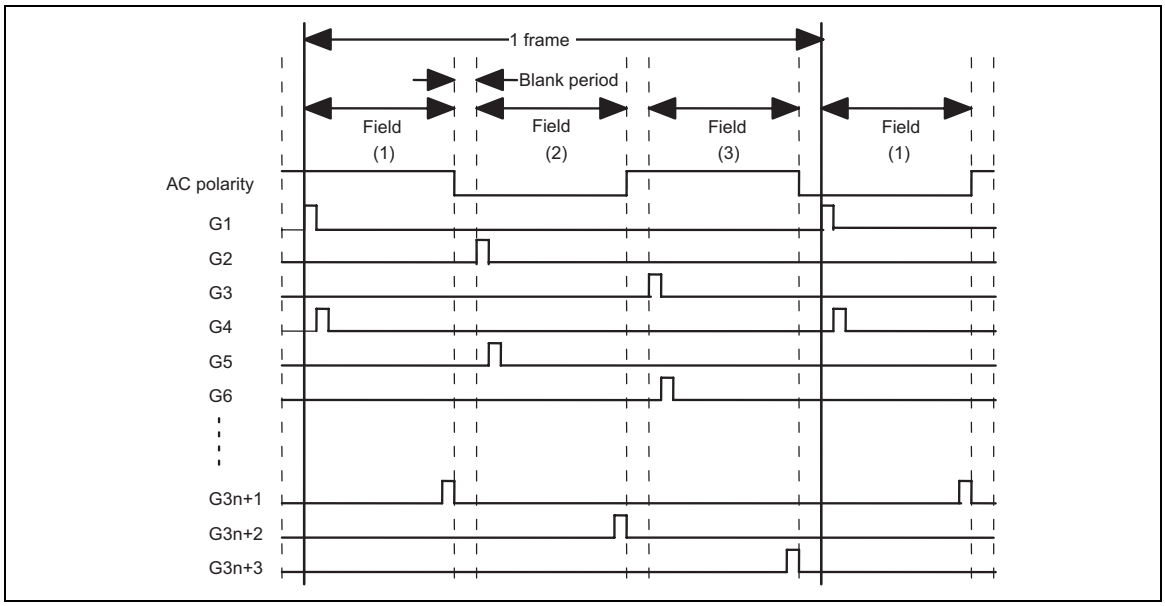

Gate output timing during 3-field interlaced drive

AC Timing

The AC timings of frame inversion AC drive, 3-field interlaced drive, and n-raster-row inversion drive are illustrated as follows. In case of frame inversion AC drive, alternation occurs at the completion of drawing one frame, followed by a blank, which lasts for 16H periods. AC Timing

The AC timings of frame inversion AC drive, 3-field interlaced drive, and n-raster-row inversion drive are illustrated as follows. In case of frame inversion AC drive, alternation occurs at the completion of drawing one frame, followed by a blank, which lasts for 8H periods. In this case, all the outputs from the gate are Vgoff outputs. In case of interlaced drive, alternation occurs at the completion of drawing one field, followed by a blank. The total period of the blanks in one frame amounts to 8 period. In case of n-raster-row, a blank lasting 8H period is inserted after drawing a full screen.

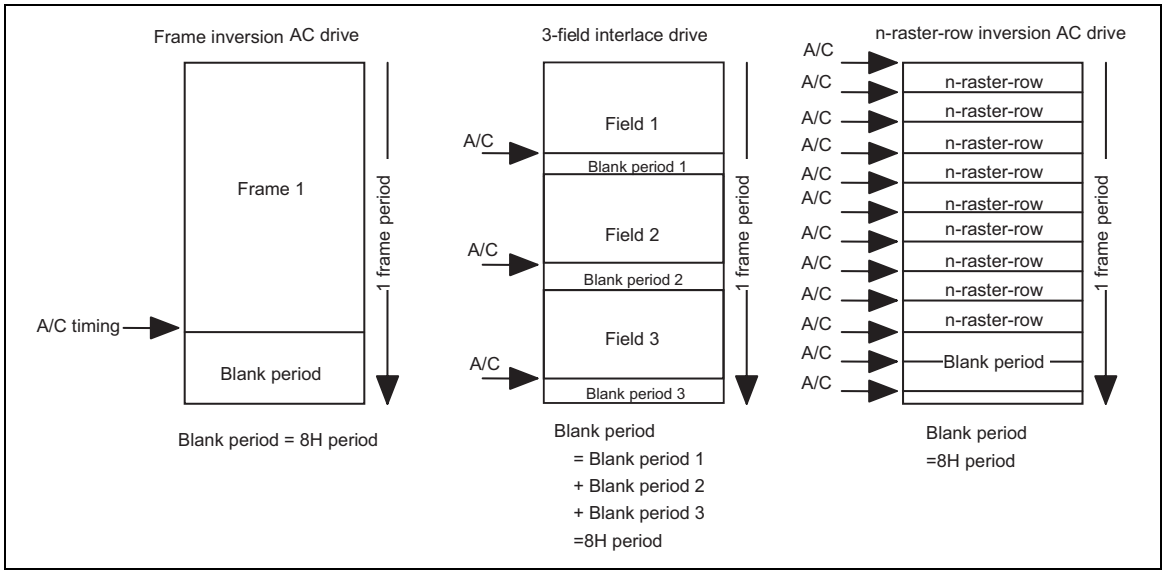

Frame-Frequency Adjustment Function

The HD66773R incorporates frame frequency adjustment function. The frame frequency during the liquid crystal drive is adjusted by the instruction setting (DIV, RTN) while keeping the oscillation frequency fixed.

Setting the oscillation frequency high in advance allows switching the frame frequency in accordance to the kind of picture to display (i.e. moving/still picture). When displaying a still picture, set the frame frequency low to save power consumption, while setting the frame frequency high for displaying a moving picture which requires high-speed switching of screens.

Relationship between Liquid Crystal Drive Duty and Frame Frequency

The relationship between the liquid crystal drive duty and the frame frequency is calculated by the following formula. The frame frequency is adjusted through instruction setting with the 1-H period adjustment bit (RTN bit) and the operation clock division bit (DIV bit).

(Formula for the frame frequency)

$$\text{Frame frequency} = \frac{\text{fosc}}{\text{Clock cycles per line} \times \text{division ratio} \times (\text{Line}+8)} \quad [\text{Hz}]$$

fosc: R-C oscillation frequency
Line: number of drive raster-rows (NL bit)
Clock cycles per raster-row: RTN bit
Division ratio: DIV bit

Calculation Example The maximum frame frequency = 60 Hz

Number of drive raster-rows: 176
1-H period: 16 clock cycles (RTN3-0 = 0000)
Operation clock division ratio: 1/1

$$\text{fosc} = 60\ \text{Hz} \times (0 + 16)\ \text{clocks} \times 1/1 \times (176 + 8)\ \text{lines} = 177\ (\text{kHz})$$

In this case, the R-C oscillation frequency is 177 kHz. Adjust the resistance of external resistor for the R-C oscillator to177 kHz.

Screen -split Drive Function

The HD66773R allows selectively driving two screens at arbitrary positions with the screen-drive position registers (R42 and R43). Only the raster-rows required to display two screens at arbitrary positions are selectively driven to reduce power consumption.

The first screen drive position register (R42) specifies the start line (SS17-10) and the end line (SE17-10) for displaying the first screen. The second screen drive position register (R43) specifies the start line (SS27-20) and the end line (SE27-20) for displaying the second screen. The second screen control is effective when the SPT bit is set to 1. The total number of raster-rows to drive for the first and second screens must be less than the number of liquid crystal drive raster-rows.

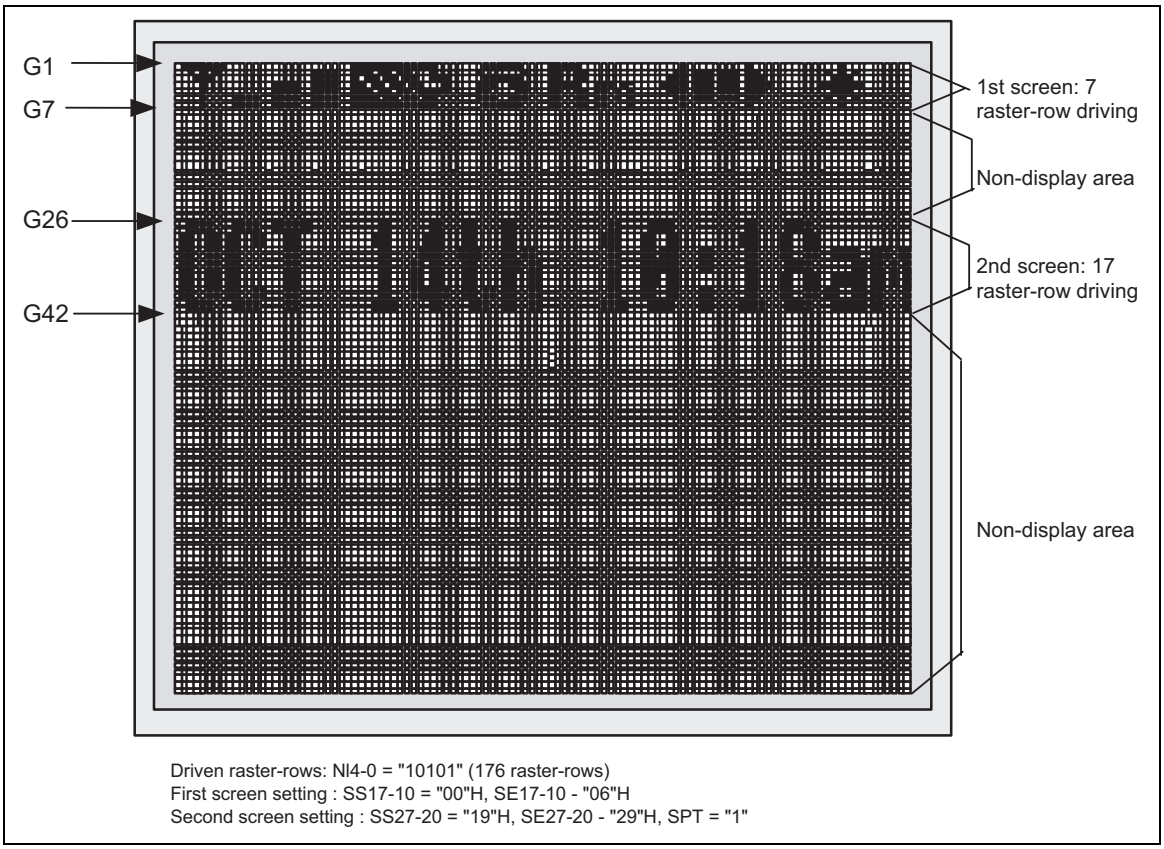

Conditions on Setting the 1st/2nd Screen Drive Position Registers

When making settings for the start line (SS17-10) and end line (SE17-10) of the first screen drive position register (R42), and the start line (SS27-20) and end line (SE27-20) of the second screen drive position register (R43) with the HD66773R, it is necessary to satisfy the following conditions to display screens correctly.

One-screen Drive (SPT = 0)

Register Settings	Display Operation
(SE17-10) - (SS17-10) = NL	Full screen display The area of (SE17-10) - (SS17-10) is normally displayed.
(SE17-10) - (SS17-10) < NL	Partial screen display The area of (SE17-10) - (SS17-10) is normally displayed. The rest of the area is white display irrespective of data in RAM.
(SE17-10) - (SS17-10) > NL	Setting disabled

Note 1) SS17-10 ≤ SE17-0 ≤ “AF”H

Note 2) Setting disabled for SS27-20 and SE27-20.

Two-screen Drive (SPT = 1)

Register Settings	Display Operation
((SE17-10) - (SS17-10)) + ((SE27-20) - (SS27-20)) = NL	Full screen display The area of (SE27-20) - (SS17-10) is normally displayed.
((SE17-10) - (SS17-10)) + ((SE27-20) - (S27-20)) < NL	Partial screen display The area of (SE27-10) - (SS17-10) is normally displayed. The rest of the area is white display irrespective of data in RAM.
((SE17-10) - (SS17-10)) + ((SE27-20) - (SS27-20)) > NL	Setting disabled

Note 1) Make sure that SS17-10 ≤ SE17-10 < SS27-20 ≤ SE27-20 ≤ “AF”H.

Note 2) Make sure that ((SE27-20) - (SS17-10)) ≤ NL.

The setting for the driver output in the non-display area during the partial display is changeable according to the characteristics of the display panel.

Source outputs in non-display area

		Source Output for Non-display Area		Source Output for Non-display Area
PT1	PT0	Positive Polarity	Negative Polarity	
0	0	V31	V0	Normal drive
0	1	V31	V0	Vgoff
1	0	GND	GND	Vgoff
1	1	High-Z	High-Z	Vgoff

To make a setting for the partial display, follow the sequence below.

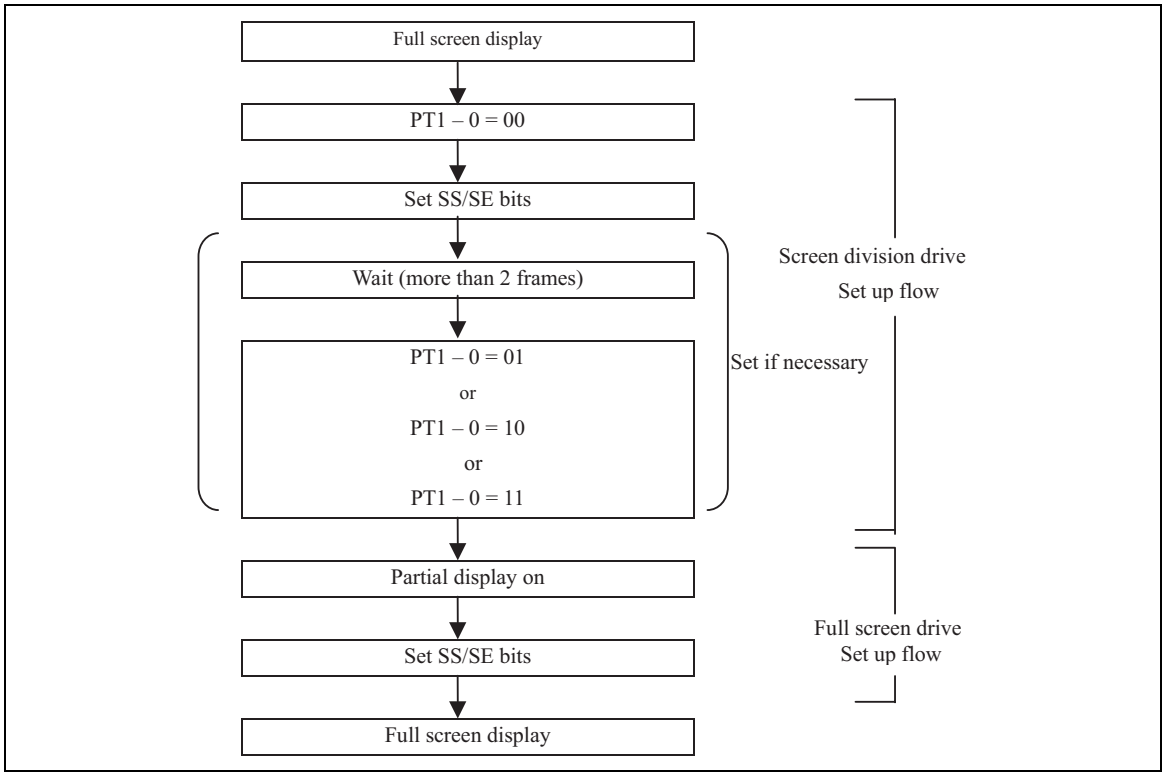

Internal Configuration of Power Generation Circuit

The internal configuration of power generation circuit of HD66773R is as follows. The step-up circuit is comprised of the step-up circuit 1 which boost 2 to 3 times the voltage supplied with Vci1, the step-up circuit 2 which further boost 2 to 4 times the voltage boosted by the step-up circuit 1, the step-up circuit 3 which invert the VGH-level voltage with the GND level as the axis and output the VGL-level voltage, and the step-up circuit 4 which invert the Vci-level voltage with the GND level as the axis and output the VCL-level voltage. The step-up circuit generates the voltage to drive a TFT LCD. Reference voltagea VDH, Vcom and Vgoff for the grayscale voltage are generated either by being adjusted in the internal voltage adjustment circuit or from the voltage at REGP, which is amplified in the amplifiers 1, 2. The Vcom, Vgoff voltages can alternate at an arbitrary voltage level. Vcom must be connected to the panel.

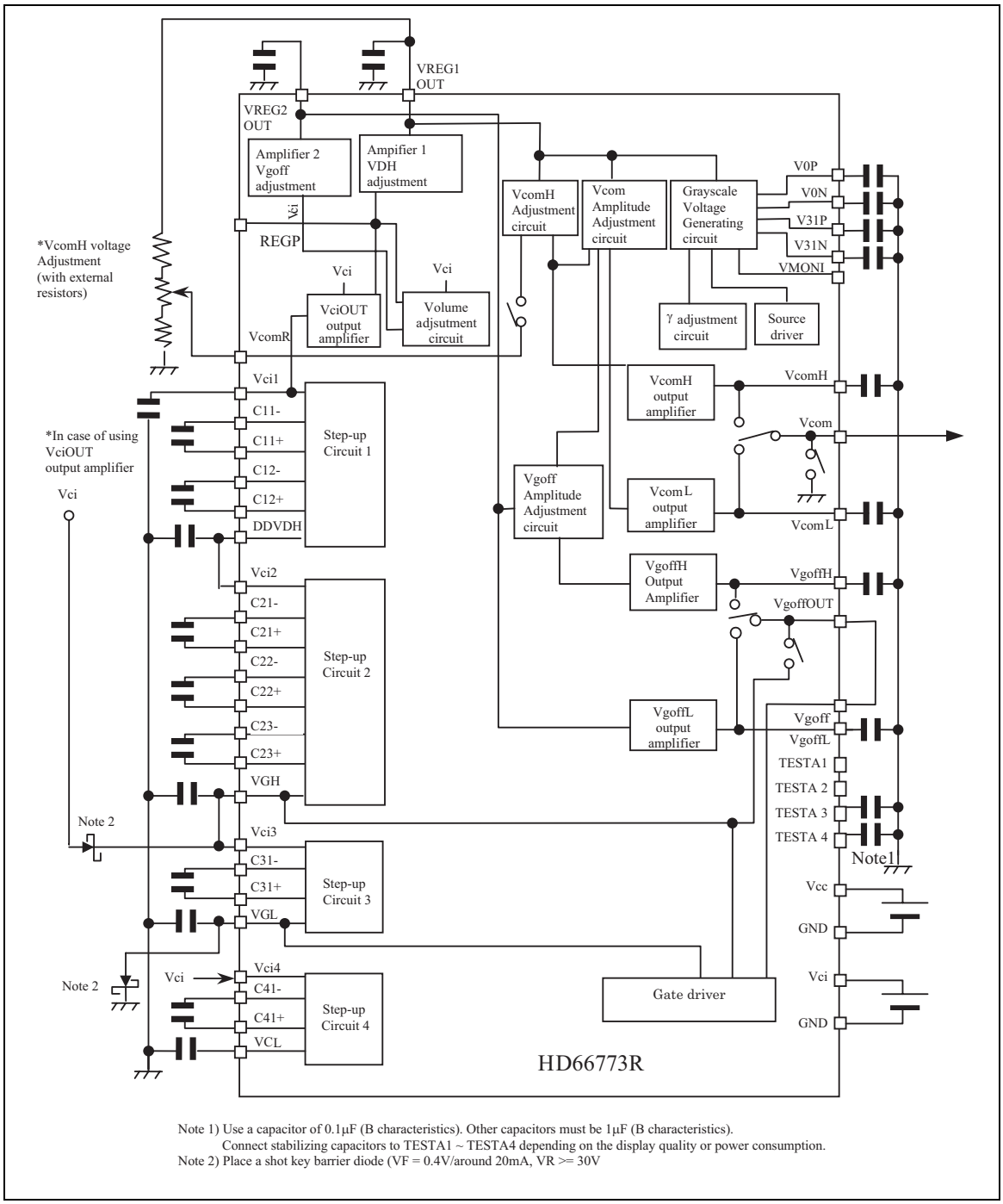

Note 1) Use a capacitor of 0.1μF (B characteristics). Other capacitors must be 1μF (B characteristics).
Connect stabilizing capacitors to TESTA1 ~ TESTA4 depending on the display quality or power consumption.
Note 2) Place a shot key barrier diode (VF = 0.4V/around 20mA, VR >= 30V

Internal configuration of power supply circuit

Specification of External Elements Connected to HD66773R

The following table shows specifications of external elements connected to HD66773R power supply.

Capacitor

Capacity	Recommended voltage	Connect pins
1 μF (B characteristic)	6V	VREG1OUT, Vci1, C41-/+ Note 1),VCL Note 1), VcomH, VcomL Note 1)
	10V	DDVDH, C11+/-, C12+/-, C21+/-, C22+/-, C23+/-
	25V	VREG2OUT, VGH, VGL, C31-/+, VgoffH Note 1), VgoffL
0.1 μF (B characteristic)	25V	(TESTA3) Note 2)
0.1 μF (B characteristic)	6V	V0P, V0N, V31P, V31N, (TESTA4) Note 2)

Note 1) These pins may not be required for some mode setting.

Note 2) Connect to a stabilizing capacitor depending on the display quality or power consumption.

Pattern Diagram for Voltage Setting

The following figures are the pattern diagram of voltage setting for the HD66733R and the voltage waveforms.

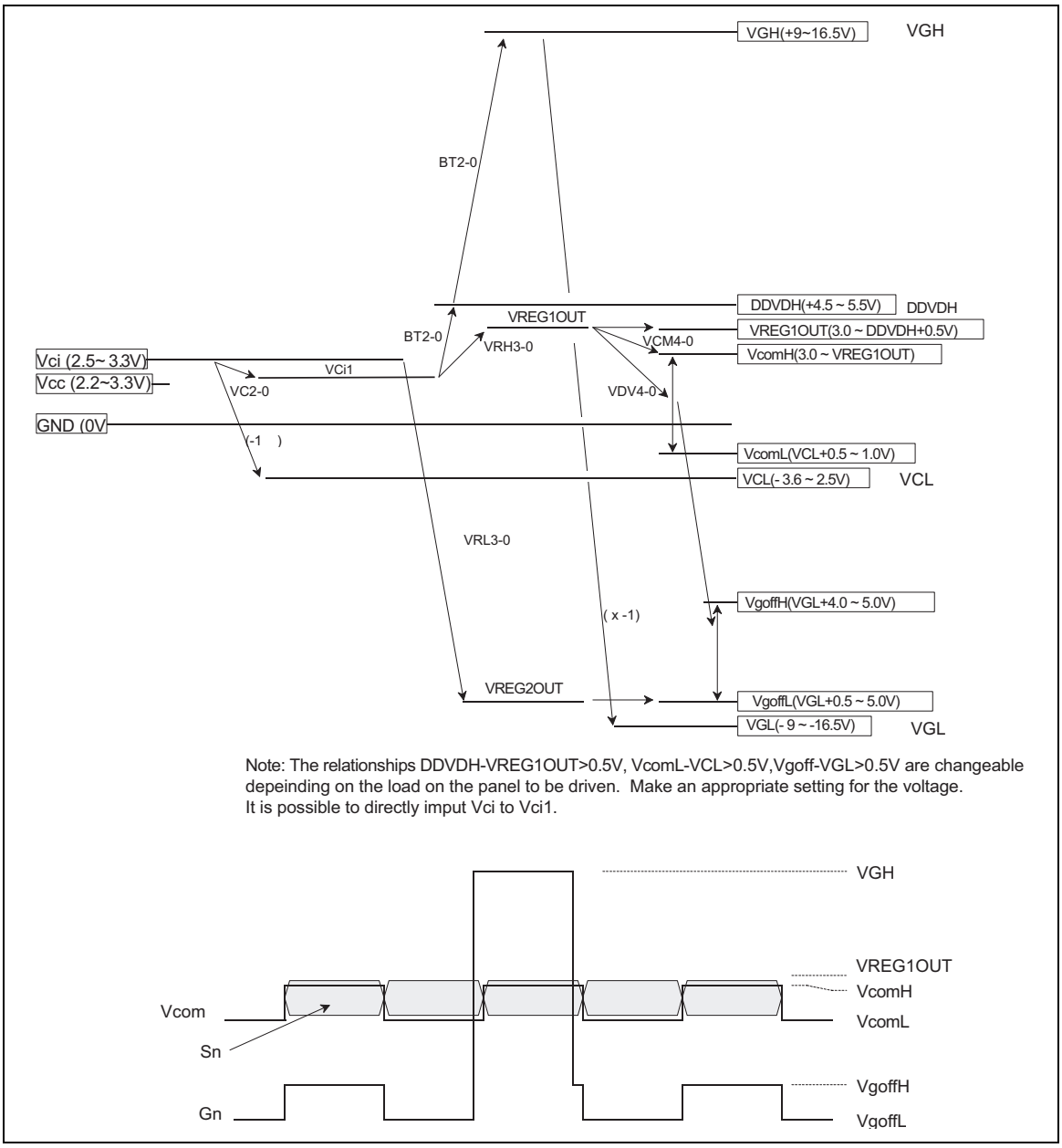

Absolute Maximum Ratings

Item	Symbol	Unit	Value	Notes
Power supply voltage (1)	Vcc	V	-0.3 ~ + 4.6	1, 2
Power supply voltage (2)	Vci - GND	V	-0.3 ~ + 4.6	1, 2
Power supply voltage (3)	DDVDH - GND	V	-0.3 ~ + 6.0	1, 2
Power supply voltage (4)	GND -VCL	V	-0.3 ~ + 4.6	1, 2
Power supply voltage (5)	DDVDH - VCL	V	-0.3 ~ + 9.0	1
Power supply voltage (6)	VGH - GND	V	-0.3 ~ + 18.5	1, 2
Power supply voltage (7)	GND - VGL	V	-0.3 ~ + 18.5	1, 2
Input voltage	Vt	V	-0.3 ~ Vcc + 0.3	1
Operating temperature	Topr	°C	-40 ~ + 85	1, 3
Storage temperature	Tstg	°C	-55 ~ + 110	1

Note 1) The LSI may be permanently damaged if it is used under the condition exceeding the above absolute maximum ratings. It is also recommended to use the LSI within the limit of its electric characteristics during normal operation. Exceeding the conditions may lead to malfunction of LSI and affect its credibility.

Note 2) The voltage from GND.

Note 3) The DC and AC characteristics of chip and wafer products are guaranteed at 85 °C.

Electric Characteristics

DC Characteristics

(V_{CC} = 1.8 to 3.7 V, Ta = –40 ~ +85°C [Note 1])

Item	Symbol	Unit	Test Condition	Min	Typ	Max	Notes
Input high voltage	V_{IH}	V	V_{CC} = 2.2 to 3.3 V	0.7 V_{CC}	—	V_{CC}	2, 3
Input low voltage (1) (OSC1 pin)	V_{IL1}	V	V_{CC} = 2.2 to 3.3 V	–0.3	—	0.15V_{CC}	2, 3
Input low voltage (2) (Except OSC1 pin)	V_{IL2}	V	V_{CC} = 2.2 to 2.4 V	–0.3	—	0.15V_{CC}	2, 3
			Vcc = 2.4 to 3.3V	–0.3	—	0.2 V_{CC}	2, 3
Output high voltage (1) (DB0-17 pins)	V_{OH1}	V	I0H = -0.1mA	-0.75Vcc	—	—	2
Output low voltage (1) (DB0-17 pins)	V_{OL1}	V	Vcc = 2.2V to 2.4V, I_{OL} =0.1mA	—	—	0.2Vcc	2
			Vcc = 2.4V to 3.3V, I_{OL} =0.1mA	—	—	0.15Vcc	2
I/O leakage current	I_{Li}	µA	Vin = 0 to Vcc	- 1	—	1	4
Current consumption during normal operation (Vcc – GND)	I_{OP}	µA	Ta = 25°C, 260,000 colors display, Vcc = 3V, CR oscillation; fosc = 176kHz (176 line drive), RAM data: 0000h, AP=001, CAD=1, VCOMG=1 VCI1 = 0.92 x VCI (VC2-0 = 001), DDVDH = 2 x VCI1, VGH = 3 x VCI2 (BT2-0 = 000), Step up circuit 1 = 60 divided cycle, Step up circuit 2, 3, and 4 = 240 divided cycle (DC2-0 = 000), VREG1OUT = REGP x 1.65 = 4.55V, (VRH = 0011) VCOMH = VREG1OUT x 0.76 = 3.46V, (VCM = 10011), VCOML = 3.46 – (VREG1OUT x 1.23) = -2.13V, (VDV = 10110), VREG2OUT = VCI x –5.5 = -16.5V, (VRL = 1001), VgoffL = -16.5V, VgoffH = -16.5V + 5.59V = -10.9V	—	90	200	5
Current consumption during Normal operation (Vci – GND)	I_{ci}	mA		—	1.25	1.5	5
Current consumption during Standby mode (Vcc – GND)	I_{ST}	µA	Vcc = 3V, Ta <=50°C	—	0.1	5	5
			Vcc = 3V, Ta >50°C	—	—	20	
Output voltage difference	ΔVo	mV	—	—	5	—	6
Average output voltage fluctuation	ΔV	mV	—	—	—	35	7

AC Characteristics

(V_{CC} = 2.2 to 3.3 V, Ta = –40 to +85°C*[1])

Clock Characteristics (V_{CC} = 2.2 to 3.3 V)

Item	Symbol	Unit	Test Condition	Min	Typ	Max	Notes
External clock frequency	Fcp	kHz	V_{CC} = 2.2 to 3.3 V	100	176	600	8
External clock duty ratio	Duty	%	V_{CC} = 2.2 to 3.3 V	45	50	55	8
External clock rise time	Trcp	µs	V_{CC} = 2.2 to 3.3 V	—	—	0.2	8
External clock fall time	Tfcp	µs	V_{CC} = 2.2 to 3.3 V	—	—	0.2	8
R-C oscillation clock	f_{OSC}	kHz	Rf = 240kΩ, V_{CC} = 3 V	184	229	274	9

68system Bus Interface Timing Characteristics

Normal Write Mode (HWM=0) (Vcc = 2.2 to 2.4 V)

Item		Symbol	Unit	Timing diagram	Min	Typ	Max
Enable cycle time	Write	t_{CYCE}	ns	Figure 1	600	—	—
	Read		ns	Figure 1	800	—	—
Enable “High” level pulse width	Write	PW_{EH}	ns	Figure 1	90	—	—
	Read				350	—	—
Enable “Low” level pulse width	Write	PW_{EL}	ns	Figure 1	300	—	—
	Read				400	—	—
Inable rising and falling time		t_{Er}, t_{Ef}	ns	Figure 1	—	—	25
Set up time (RS, R/W, to E, CS*)		t_{ASE}	ns	Figure 1	10	—	—
Address hold time		t_{AHE}	ns	Figure 1	5	—	—
Write data set up time		t_{DSWE}	ns	Figure 1	60	—	—
Write data hold time		t_{HE}	ns	Figure 1	15	—	—
Read data delay time		t_{DDRE}	ns	Figure 1	—	—	200
Read data hold time		t_{DHRE}	ns	Figure 1	5	—	—

High-Speed Write Mode (HWM=1) (Vcc = 2.2 to 2.4 V)

Item		Symbol	Unit	Timing diagram	Min	Typ	Max
Enable cycle time	Write	t_{CYCE}	ns	Figure 1	200	—	—
	Read		ns	Figure 1	800	—	—
Enable “High” level pulse width	Write	PW_{EH}	ns	Figure 1	90	—	—
	Read				350	—	—
Enable “Low” level pulse width	Write	PW_{EL}	ns	Figure 1	90	—	—
	Read				400	—	—
Inable rising and falling time		t_{Er}, t_{Ef}	ns	Figure 1	—	—	25
Set up time (RS, R/W, to E, CS*)		t_{ASE}	ns	Figure 1	10	—	—
Address hold time		t_{AHE}	ns	Figure 1	5	—	—
Write data set up time		t_{DSWE}	ns	Figure 1	60	—	—
Write data hold time		t_{HE}	ns	Figure 1	15	—	—
Read data delay time		t_{DDRE}	ns	Figure 1	—	—	200
Read data hold time		t_{DHRE}	ns	Figure 1	5	—	—

Normal Write Mode (HWM=0) (Vcc = 2.4 to 3.3 V)

Item		Symbol	Unit	Timing diagram	Min	Typ	Max	Note
Enable cycle time	Write	t_{CYCE}	ns	Figure 1	200	—	—	—
	Read		ns	Figure 1	300	—	—	—
Enable “High” level pulse width	Write	PW_{EH}	ns	Figure 1	40	—	—	—
	Read				150	—	—	—
Enable “Low” level pulse width	Write	PW_{EL}	ns	Figure 1	100	—	—	—
	Read				100	—	—	—
Inable rising and falling time		t_{Er}, t_{Ef}	ns	Figure 1	—	—	25	
Set up time (RS, R/W, to E, CS*)		t_{ASE}	ns	Figure 1	10	—	—	with status read
					0	—	—	without status read
Address hold time		t_{AHE}	ns	Figure 1	2	—	—	—
Write data set up time		t_{DSWE}	ns	Figure 1	60	—	—	—
Write data hold time		t_{HE}	ns	Figure 1	2	—	—	—
Read data delay time		t_{DDRE}	ns	Figure 1	—	—	100	—
Read data hold time		t_{DHRE}	ns	Figure 1	5	—	—	—

High-Speed Write Mode (HWM=1) (Vcc = 2.4 to 3.3 V)

Item		Symbol	Unit	Timing diagram	Min	Typ	Max	Note
Enable cycle time	Write	t_{CYCE}	ns	Figure 1	100	—	—	
	Read		ns	Figure 1	300	—	—	
Enable “High” level pulse width	Write	PW_{EH}	ns	Figure 1	40	—	—	
	Read			Figure 1	150	—	—	
Enable “Low” level pulse width	Write	PW_{EL}	ns	Figure 1	40	—	—	
	Read			Figure 1	100	—	—	
Inable rising and falling time		t_{Er}, t_{Ef}	ns	Figure 1	—	—	25	
Set up time (RS, R/W, to E, CS*)		t_{ASE}	ns	Figure 1	10	—	—	with status read
					0			without status read
Address hold time		t_{AHE}	ns	Figure 1	2	—	—	
Write data set up time		t_{DSWE}	ns	Figure 1	60	—	—	
Write data hold time		t_{HE}	ns	Figure 1	2	—	—	
Read data delay time		t_{DDRE}	ns	Figure 1	—	—	100	
Read data hold time		t_{DHRE}	ns	Figure 1	5	—	—	

80-system Bus Interface Timing Characteristics

Normal Write Mode (HWM=0) (Vcc = 2.2 to 2.4 V)

Item		Symbol	Unit	Timing diagram	Min	Typ	Max
Bus cycle time	Write	t_{CYCW}	ns	Figure 2	600	—	—
	Read	t_{CYCR}	ns	Figure 2	800	—	—
Write low-level pulse width		PW_{LW}	ns	Figure 2	90	—	—
Read low-level pulse width		PW_{LR}	ns	Figure 2	350	—	—
Write high-level pulse width		PW_{HW}	ns	Figure 2	300	—	—
Read high-level pulse width		PW_{HR}	ns	Figure 2	400	—	—
Write/Read rise/fall time		$t_{WRr, WRf}$	ns	Figure 2	—	—	25
Setup time (RS to CS*, WR*, RD*)		t_{AS}	ns	Figure 2	10	—	—
Address hold time		t_{AH}	ns	Figure 2	5	—	—
Write data set up time		t_{DSW}	ns	Figure 2	60	—	—
Write data hold time		t_{HWR}	ns	Figure 2	15	—	—
Read data delay time		t_{DDR}	ns	Figure 2	—	—	200
Read data hold time		t_{DHR}	ns	Figure 2	5	—	—

High-Speed Write Mode (HWM=1) (Vcc = 2.2 to 2.4 V)

Item		Symbol	Unit	Timing diagram	Min	Typ	Max
Bus cycle time	Write	t_{CYCW}	ns	Figure 2	200	—	—
	Read	t_{CYCR}	ns	Figure 2	800	—	—
Write low-level pulse width		PW_{LW}	ns	Figure 2	90	—	—
Read low-level pulse width		PW_{LR}	ns	Figure 2	350	—	—
Write high-level pulse width		PW_{HW}	ns	Figure 2	90	—	—
Read high-level pulse width		PW_{HR}	ns	Figure 2	400	—	—
Write/Read rise/fall time		$t_{WRr, WRf}$	ns	Figure 2	—	—	25
Set up time (RS to CS*, WR*, RD*)		t_{AS}	ns	Figure 2	10	—	—
Address hold time		t_{AH}	ns	Figure 2	5	—	—
Write data set up time		t_{DSW}	ns	Figure 2	60	—	—
Write data hold time		t_{HWR}	ns	Figure 2	15	—	—
Read data delay time		t_{DDR}	ns	Figure 2	—	—	200
Read data hold time		t_{DHR}	ns	Figure 2	5	—	—

Normal Write Mode (HWM=0) (Vcc = 2.4 to 3.3 V)

Item		Symbol	Unit	Timing diagram	Min	Typ	Max	Notes
Bus cycle time	Write	t_{CYCW}	ns	Figure 2	200	—	—	
	Read	t_{CYCR}	ns	Figure 2	300	—	—	
Write low-level pulse width		PW_{LW}	ns	Figure 2	40	—	—	
Read low-level pulse width		PW_{LR}	ns	Figure 2	150	—	—	
Write high-level pulse width		PW_{HW}	ns	Figure 2	100	—	—	
Read high-level pulse width		PW_{HR}	ns	Figure 2	100	—	—	
Write/Read rise/fall time		$t_{WRr, WRf}$	ns	Figure 2	—	—	25	
Set up time (RS to CS*, WR*, RD*)		t_{AS}	ns	Figure 2	10	—	—	with status read
				Figure 2	0	—	—	without status read
Address hold time		t_{AH}	ns	Figure 2	2	—	—	
Write data setup time		t_{DSW}	ns	Figure 2	60	—	—	
Write data hold time		t_{HWR}	ns	Figure 2	2	—	—	
Read data delay time		t_{DDR}	ns	Figure 2	—	—	100	
Read data hold time		t_{DHR}	ns	Figure 2	5	—	—	

High-Speed Write Mode (HWM=1) (Vcc = 2.4 to 3.3 V)

Item		Symbol	Unit	Timing diagram	Min	Typ	Max	Notes
Bus cycle time	Write	t_{CYCW}	ns	Figure 2	100	—	—	
	Read	t_{CYCR}	ns	Figure 2	300	—	—	
Write low-level pulse width		PW_{Lw}	ns	Figure 2	40	—	—	
Read low-level pulse width		PW_{LR}	ns	Figure 2	150	—	—	
Write high -level pulse width		PW_{HW}	ns	Figure 2	40	—	—	
Read high -level pulse width		PW_{HR}	ns	Figure 2	100	—	—	
Write/Read rise/fall time		$t_{WRr, WRf}$	ns	Figure 2	—	—	25	
Set up time (RS to CS*, WR*, RD*)		t_{AS}	ns	Figure 2	10	—	—	with status read
				Figure 2	0			without status read
Address hold time		t_{AH}	ns	Figure 2	2	—	—	
Write data set up time		t_{DSW}	ns	Figure 2	60	—	—	
Write data hold time		t_{HWR}	ns	Figure 2	2	—	—	
Read data delay time		t_{DDR}	ns	Figure 2	—	—	100	
Read data hold time		t_{DHR}	ns	Figure 2	5	—	—	

Serial Peripheral Interface timing characteristics

(Vcc = 2.2V to 2.4V)

Item		Symbol	Unit	Timing diagram	Min	Typ	Max
Serial clock cycle time	Write (received)	t_{SCYC}	us	Figure 3	0.1	—	20
	Read (transmitted)	t_{SCYC}	us	Figure 3	0.25	—	20
Serial clock high-level pulse width	Write (received)	t_{SCH}	ns	Figure 3	40	—	—
	Read (transmitted)	t_{SCH}	ns	Figure 3	120	—	—
Serial clock low-level pulse width	Write (received)	t_{SCL}	ns	Figure 3	40	—	—
	Read (transmitted)	t_{SCL}	ns	Figure 3	120	—	—
Serial clock rise/fall time		t_{scr}, t_{scf}	ns	Figure 3	—	—	20
Chip select set up time		t_{CSU}	ns	Figure 3	20	—	—
Chip select hold time		t_{CH}	ns	Figure 3	60	—	—
Serial input data set up time		t_{SISU}	ns	Figure 3	30	—	—
Serial input data hold time		t_{SIH}	ns	Figure 3	30	—	—
Serial output data delay time		t_{SOD}	ns	Figure 3	—	—	130
Serial output data hold time		t_{SOH}	ns	Figure 3	5	—	—

(Vcc = 2.4V to 3.3V)

Item		Symbol	Unit	Timing diagram	Min	Typ	Max
Serial clock cycle time	Write (received)	t_{SCYC}	us	Figure 3	0.076	—	20
	Read (transmitted)	t_{SCYC}	us	Figure 3	0.15	—	20
Serial clock high-level pulse width	Write (received)	t_{SCH}	ns	Figure 3	40	—	—
	Read (transmitted)	t_{SCH}	ns	Figure 3	70	—	—
Serial clock low-level pulse width	Write (received)	t_{SCL}	ns	Figure 3	35	—	—
	Read (transmitted)	t_{SCL}	ns	Figure 3	70	—	—
Serial clock rise/fall time		t_{scr}, t_{scf}	ns	Figure 3	—	—	20
Chip select set up time		t_{CSU}	ns	Figure 3	20	—	—
Chip select hold time		t_{CH}	ns	Figure 3	60	—	—
Serial input data set up time		t_{SISU}	ns	Figure 3	30	—	—
Serial input data hold time		t_{SIH}	ns	Figure 3	30	—	—
Serial output data delay time		t_{SOD}	ns	Figure 3	—	—	130
Serial output data hold time		t_{SOH}	ns	Figure 3	5	—	—

Reset Timing Characteristics

(V_{CC} = 2.2 to 3.3 V)

Item	Symbol	Unit	Timing diagram	Min	Typ	Max
Reset low-level width	t_{RES}	ms	Figure 4	1	—	—
Reset rise time	t_{rRES}	µs	Figure 4	—	—	10

Notes to Electrical Characteristics

1. The DC/AC electrical characteristics of bare die and wafer products are guaranteed at 85°C.
2. The following figures illustrate the configurations of I pin, I/O pin, and O pin.

Pins: RESET*, CS*, E/WR/SCL, RW/RD, RS, OSC1, IM3-1, IM0/ID, TEST1, TEST2, TESTV1, DCTEST

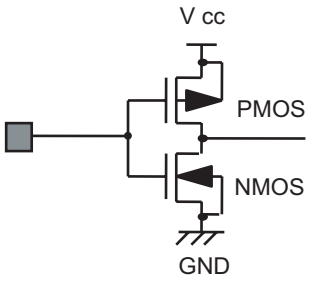

Pins: OSC2

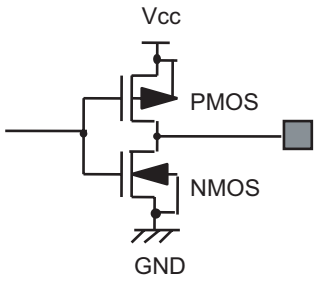

Pins: DB17 -DB2, DB1/SD0, DB0/SDI

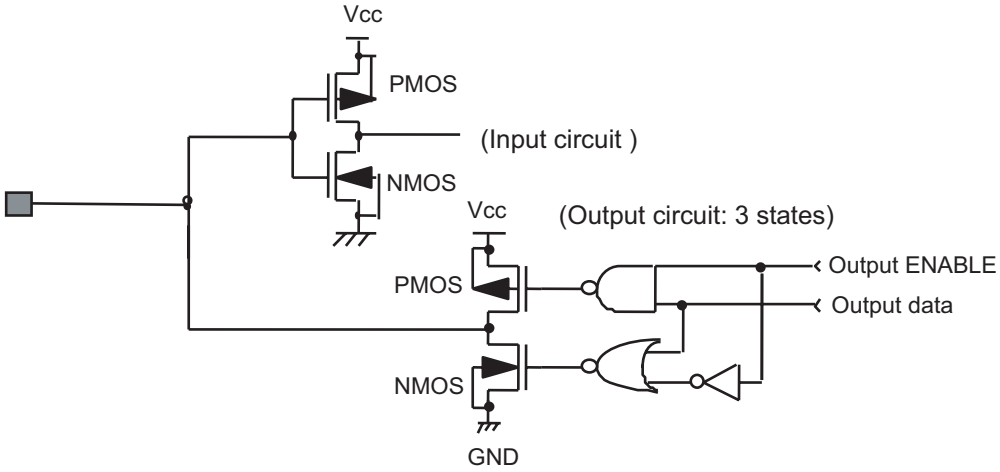

3. TEST, IM1, IM0/ID pins must be grounded or connected to Vcc.

4. This excludes the current through output drive MOS.

5. This excludes the current through the input/output units. The input level must be fixed to a certain level because penetrating current increases in the input circuit when CMOS input level takes a middle level. The current consumption is unchanged irrespective of “High” or “Low” of CS*pin while the HD66773R is not accessed through interface pins.

6. The output voltage difference is the difference in the voltages of neighboring source outputs for a same display (within a chip). This value is just for a referential purpose.

7. The average output voltage fluctuation is the difference in the average source output voltages among different chips. The average output voltage is an average source voltage within a chip for a same display.

8. This applies to the case when clocks are supplied externally.

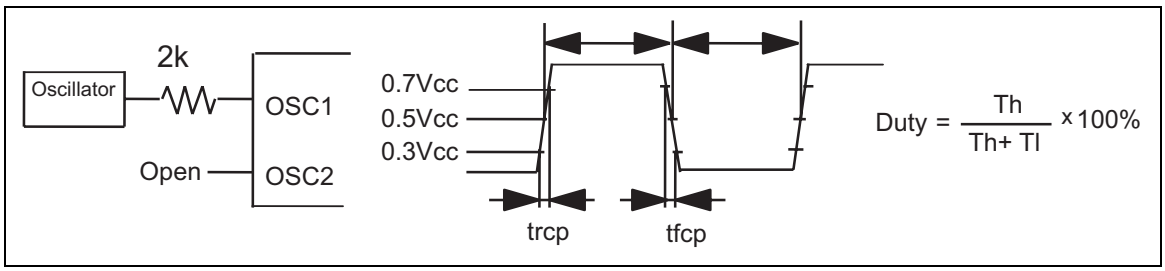

9. This applies to the internal oscillator when external oscillation resistor Rf is used.

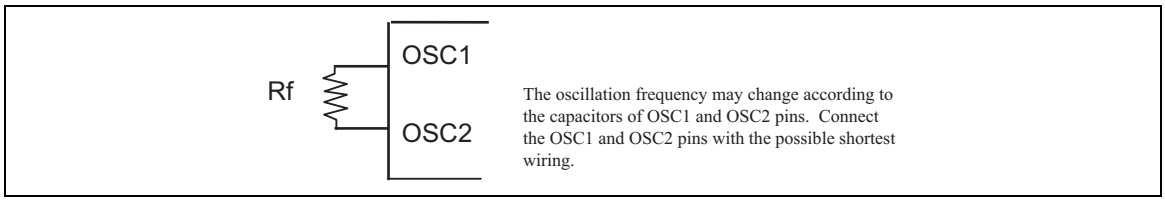

Referential data

Oscillation Resistance (kΩ)	Vcc = 1.8 V	Vcc = 2.0 V	Vcc = 2.4 V	Vcc = 3.0V	Vcc = 3.3V
110kΩ	329.6	362.6	399.4	438.5	447.6
150kΩ	260.7	285.4	313.3	337.4	343.4
180kΩ	230.9	252.2	274.0	294.9	302.1
200 kΩ	213.0	230.4	251.5	268.7	274.8
240 kΩ	187.7	201.3	216.8	229.4	234.8
270 kΩ	168.6	181.3	195.1	206.9	210.2
300 kΩ	154.5	166.1	178.2	187.5	191.1
390 kΩ	125.4	133.7	142.3	148.9	151.6
430 kΩ	115.9	121.6	129.0	135.2	137.3

VCI adjustment circuit – Load characteristics

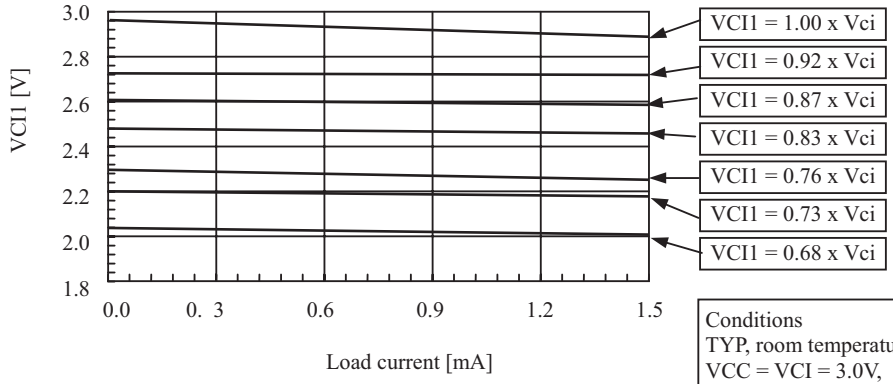

Conditions
TYP, room temperature
VCC = VCI = 3.0V,
fOSC = 240kHz
AP = 011 Medium current mode

Step- up1 – Load characteristics

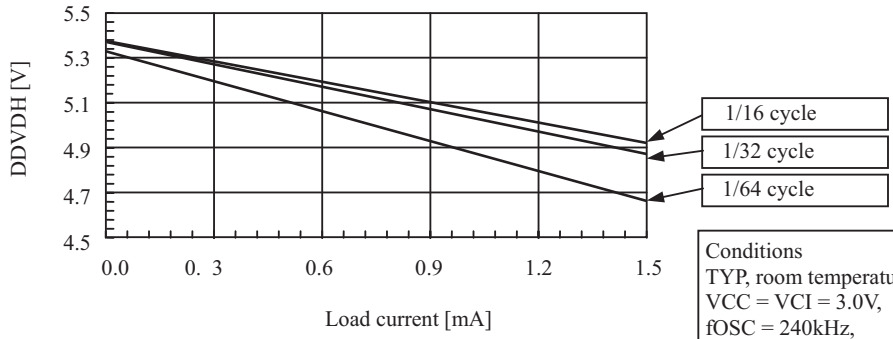

Conditions
TYP, room temperature
VCC = VCI = 3.0V,
fOSC = 240kHz,
AP = 011 Medium current mode
VCI1 = 0.92 x VCI,
Step-up 1 : x2

Step- up2 – Load characteristics

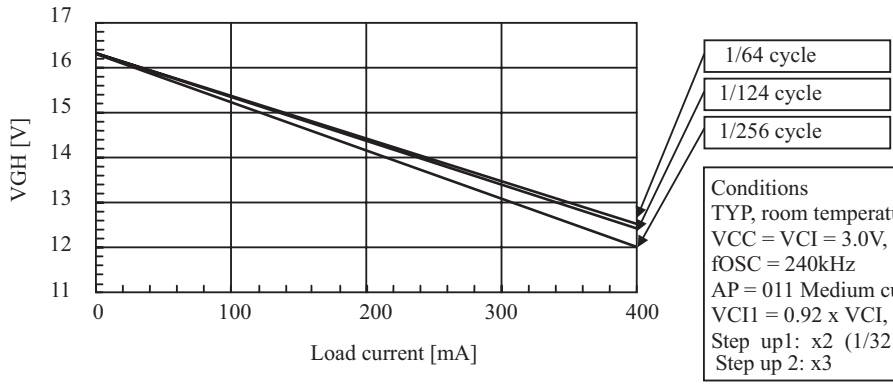

Conditions
TYP, room temperature
VCC = VCI = 3.0V,
fOSC = 240kHz
AP = 011 Medium current mode
VCI1 = 0.92 x VCI,
Step up1: x2 (1/32 cycle)
Step up 2: x3

Step- up3 – Load characteristics

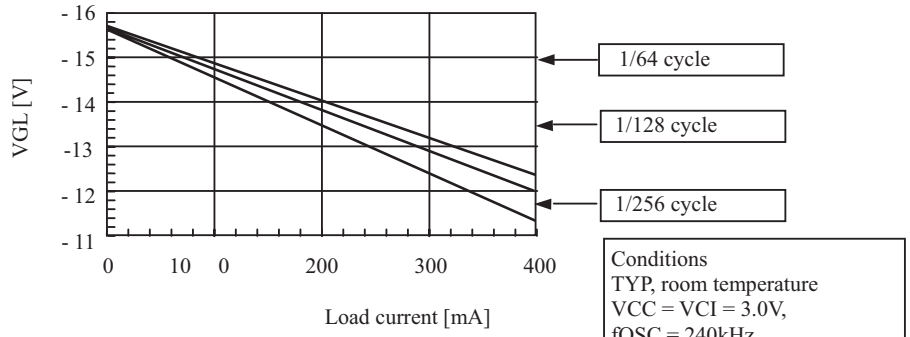

Conditions
TYP, room temperature
VCC = VCI = 3.0V,
fOSC = 240kHz
AP = 011 Medium current mode
VCI1 = 0.92 x VCI,
Step up1: x2 (1/32 cycle)
Step up 2: x3

Step-up 4 – Load characteristics

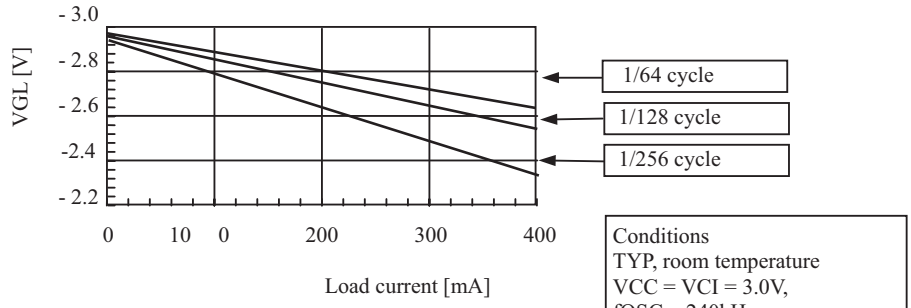

Conditions
TYP, room temperature
VCC = VCI = 3.0V,
fOSC = 240kHz
AP = 011 Medium current mode
VCI1 = 0.92 x VCI,
Step up1: x2 (1/32 cycle)
Step up 2: x3

Current consumption - Frame frequency dependence

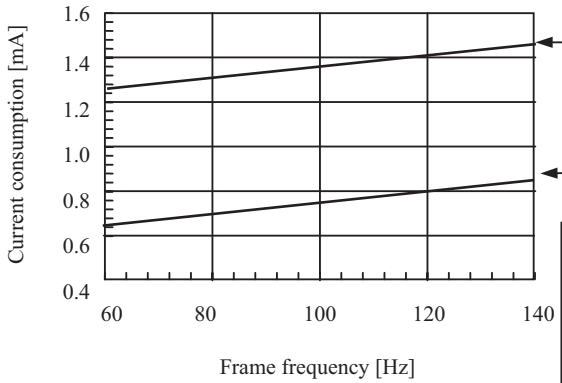

Conditions
TYP, room temperature
VCC = VCI = 3.0V,
fOSC = 240kHz
176 duty, B waveform AC,
RAM = h'0000
AP = 001 Small current mode
VCI1 = 0.92 x VCI,
Step up1: x2 (1/64 cycle)
Step up2: x3 (1/256 cycle)
CAD mode
VREG1OUT = REGP x 1.65
VREG2OUT = VCI x (-5.5),
VCOMH = VREG1OUT x 0.76,
VCOML = VCOMH - (VREG1OUT x 1.23)

Current consumption – Write cycle dependency

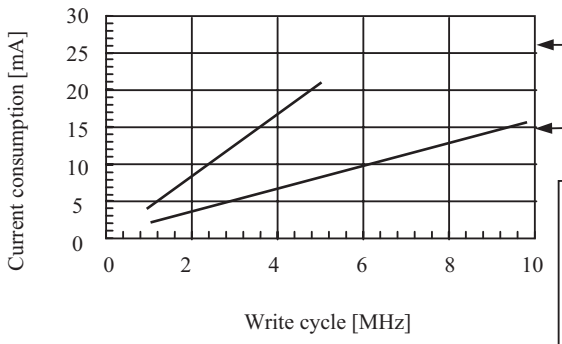

Conditions
TYP, room temperature
VCC = VCI = 3.0V,
fOSC = 240kHz
176 duty, B waveform AC,
RAM = h'0000
AP = 001 Small current mode
VCI1 = 0.92 x VCI,
Step up1: x2 (1/64 cycle)
Step up2: x3 (1/256 cycle)
CAD mode
VREG1OUT = REGP x 1.65
VREG2OUT = VCI x (-5.5),
VCOMH = VREG1OUT x 0.76,
VCOML = VCOMH - (VREG1OUT x 1.23)

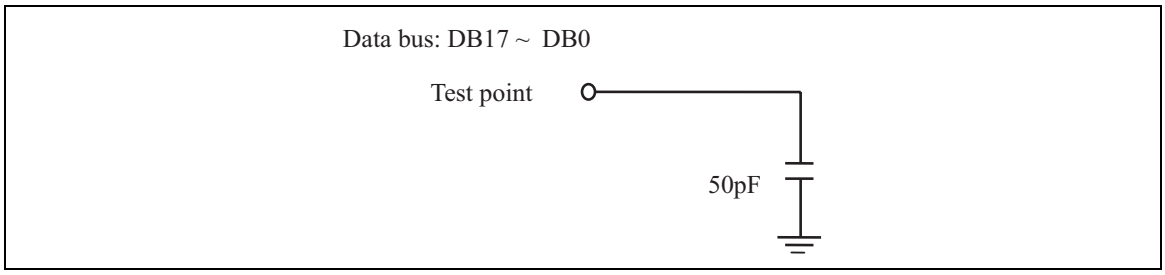

Load circuit for AC characteristics test

Timing characteristics diagram

68-system bus interface operation

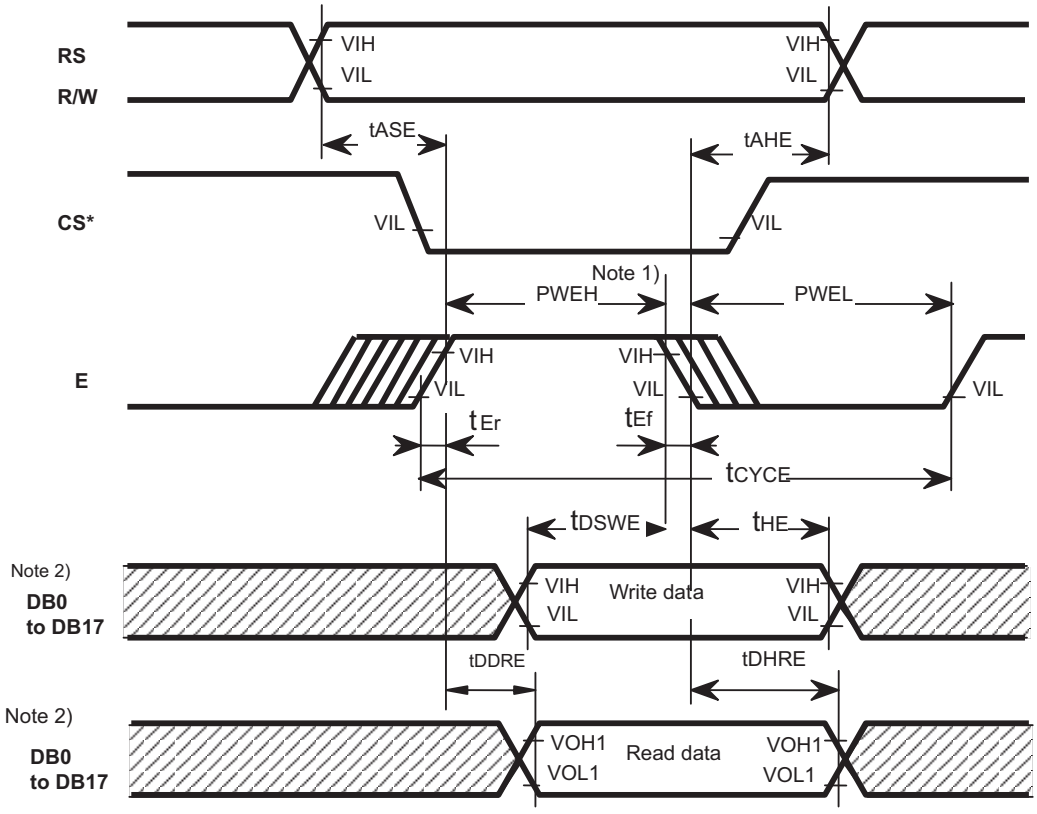

Note 1) PWEH is determined by the overlapping period when CS* is "Low" and E is "High".
Note 2) Parallel data transfer through DB17-0 pins with 18-bit bus interface.
Parallel data transfer through DB17-10, DB8-1 pins with16-bit bus interface.
Fix unused DB9,0 pins to "GND".
Parallel data transfer through DB17-9 pinswith 9-bit bus interface.
Fix unused DB8-0 pins to "GND".
Parallel data transfer through DB17-10 pins with 8-bit bus interface.
Fix unused DB9-0 pins to "GND".

Figure 1

80-system bus interface operation

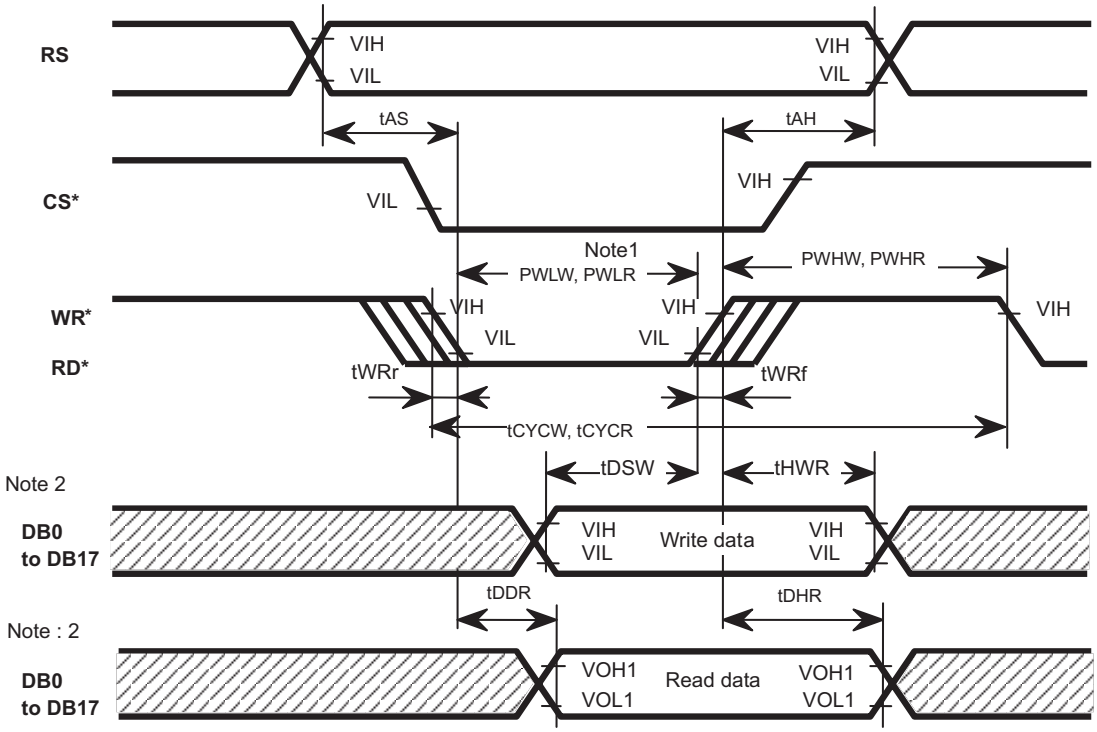

Note 1) PWEH is determined by the overlapping period when CS* is "Low" and E is "High".
Note 2) Parallel data transfer through DB17-0 pins with 18-bit bus interface.
Parallel data transfer through DB17-10, DB8-1 pins with16-bit bus interface.
Fix unused DB9,0 pins to "GND".
Parallel data transfer through DB17-9 pinswith 9-bit bus interface.
Fix unused DB8-0 pins to "GND".
Parallel data transfer through DB17-10 pins with 8-bit bus interface.
Fix unused DB9-0 pins to "GND".

Figure 2

Serial Peripheral Interface Operation

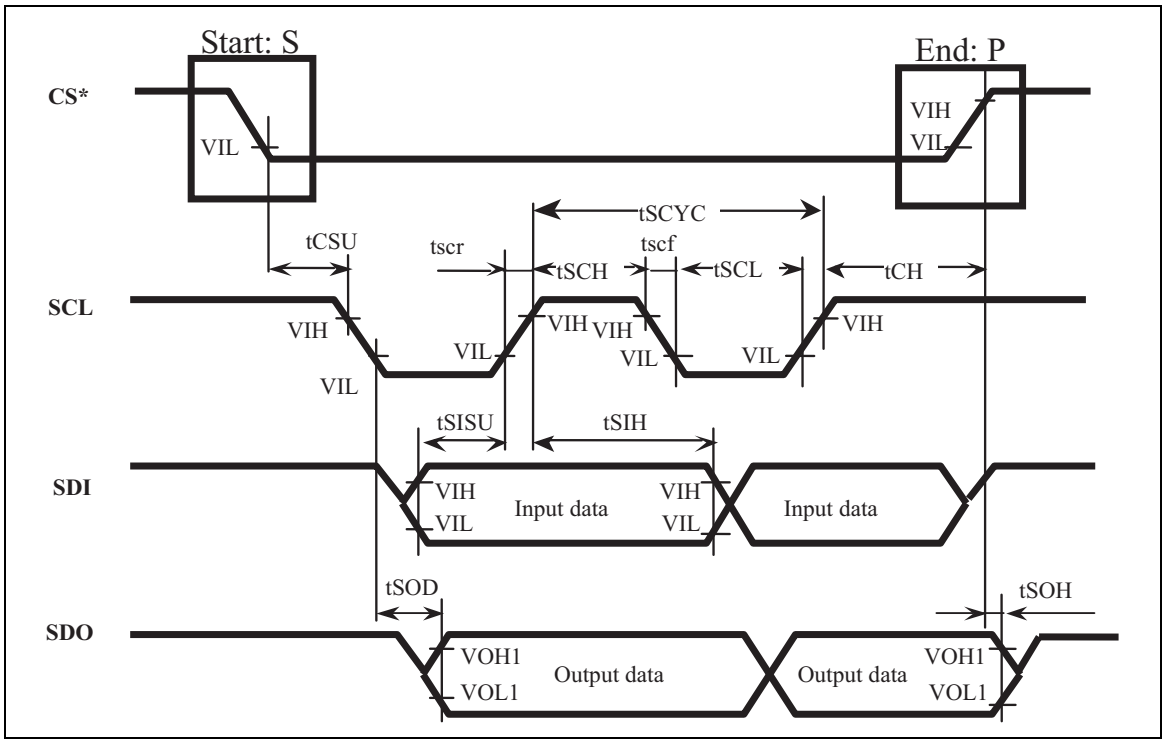

Figure 3

Reset operation

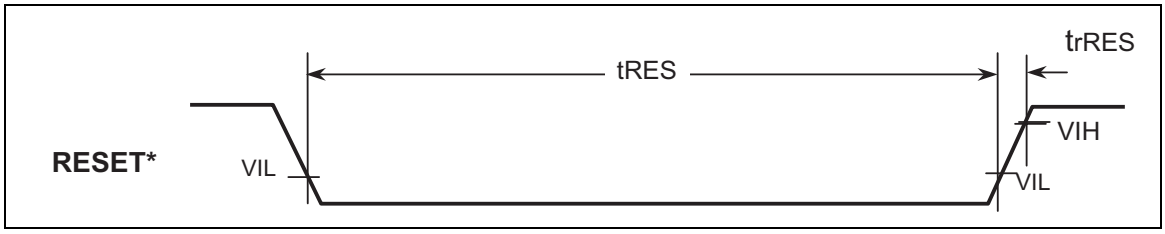

Figure 4

Insert Wiring example

Renesas Technology Corp. Sales Strategic Planning Div. Nippon Bldg., 2-6-2, Ohte-machi, Chiyoda-ku, Tokyo 100-0004, Japan

Keep safety first in your circuit designs!

1. Renesas Technology Corporation puts the maximum effort into making semiconductor products better and more reliable, but there is always the possibility that trouble may occur with them. Trouble with semiconductors may lead to personal injury, fire or property damage.
   Remember to give due consideration to safety when making your circuit designs, with appropriate measures such as (i) placement of substitutive, auxiliary circuits, (ii) use of nonflammable material or (iii) prevention against any malfunction or mishap.

Notes regarding these materials

1. These materials are intended as a reference to assist our customers in the selection of the Renesas Technology Corporation product best suited to the customer's application; they do not convey any license under any intellectual property rights, or any other rights, belonging to Renesas Technology Corporation or a third party.
2. Renesas Technology Corporation assumes no responsibility for any damage, or infringement of any third-party's rights, originating in the use of any product data, diagrams, charts, programs, algorithms, or circuit application examples contained in these materials.
3. All information contained in these materials, including product data, diagrams, charts, programs and algorithms represents information on products at the time of publication of these materials, and are subject to change by Renesas Technology Corporation without notice due to product improvements or other reasons. It is therefore recommended that customers contact Renesas Technology Corporation or an authorized Renesas Technology Corporation product distributor for the latest product information before purchasing a product listed herein.
   The information described here may contain technical inaccuracies or typographical errors.
   Renesas Technology Corporation assumes no responsibility for any damage, liability, or other loss rising from these inaccuracies or errors.
   Please also pay attention to information published by Renesas Technology Corporation by various means, including the Renesas Technology Corporation Semiconductor home page (http://www.renesas.com).
4. When using any or all of the information contained in these materials, including product data, diagrams, charts, programs, and algorithms, please be sure to evaluate all information as a total system before making a final decision on the applicability of the information and products. Renesas Technology Corporation assumes no responsibility for any damage, liability or other loss resulting from the information contained herein.
5. Renesas Technology Corporation semiconductors are not designed or manufactured for use in a device or system that is used under circumstances in which human life is potentially at stake. Please contact Renesas Technology Corporation or an authorized Renesas Technology Corporation product distributor when considering the use of a product contained herein for any specific purposes, such as apparatus or systems for transportation, vehicular, medical, aerospace, nuclear, or undersea repeater use.
6. The prior written approval of Renesas Technology Corporation is necessary to reprint or reproduce in whole or in part these materials.
7. If these products or technologies are subject to the Japanese export control restrictions, they must be exported under a license from the Japanese government and cannot be imported into a country other than the approved destination.
   Any diversion or reexport contrary to the export control laws and regulations of Japan and/or the country of destination is prohibited.
8. Please contact Renesas Technology Corporation for further details on these materials or the products contained therein.

http://www.renesas.com

Copyright © 2003. Renesas Technology Corporation, All rights reserved. Printed in Japan.

Colophon 0.0

Revision Record

Rev.	Date	Contents of Modification	Drawn by	Approved by
1.01	2003.Jan.	Page 112. Delete “DB1SD0” and “DB0/SD1” in the figure.		
		Page 113. Change Note 6. Change “R1” to “%RF” in the figure.		
1.2	2003.Jun.	Page 7. Add “or DDVDH”.		
		Page 8. Error corrections.		
		Page 9. Error corrections. Add descriptions to “DUMMY1, 21, 23, 39” and “DUMMY 2-21, 24-38”.		
		Page 21. Specify the instruction accessible during the standby mode: R03h		
		Page 73. Error correction.		
		Page 77. Add the power off sequence.		
		Page 78. Add the power off sequence.		
		Page 79. Correction to the Figure: Power Off Sequence.		
		Page 89. Change the recommended voltage for TEST4.		
		Page 90. Error correction.		
		Page 95, 96. Error corrections. Change Figure 1 to Figure 2, “t_H” to “T_{HWR}”		
		Page 97. Error correction.		
		Page 99. Specify the application of notes 6, 7.		